ME464 CodeHW 3

Monday, February 23, 2026 4:13 PM

Paul Martin
Student Name

HW #3: WRITTEN

Box answers and show all work in the space provided. Submit at the start of class on the scheduled due date.

For the following questions, consider the single DOF robot diagram shown in Figure 1.

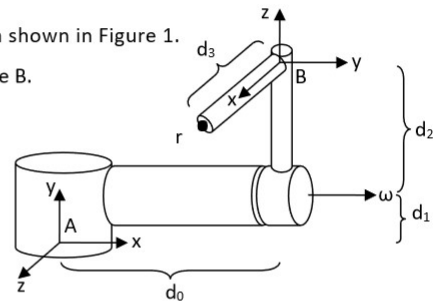

Figure 1. A 1 DOF manipulator in its home position

1) Find the homogeneous coordinates of the point, $\mathbf{r}_b$, in body frame B.

$$r_b = \begin{bmatrix} d_3 \\ 0 \\ 0 \\ 1 \end{bmatrix} = \begin{bmatrix} 3.3 \\ 0 \\ 0 \\ 1 \end{bmatrix}$$

$V = -\omega \times q = -\hat{\omega} q$

2) Find the twist coordinates, ξ, that describe the rigid motion.

$$\omega = \begin{bmatrix} 1 \\ 0 \\ 0 \end{bmatrix} \qquad V = -\begin{bmatrix} 0 & 0 & 0 \\ 0 & 0 & -1 \\ 0 & 1 & 0 \end{bmatrix}\begin{bmatrix} d_0 \\ d_1 \\ 0 \end{bmatrix} = \begin{bmatrix} 0 \\ 0 \\ -d_1 \end{bmatrix}$$

$$\hat{\omega} = \begin{bmatrix} 0 & 0 & 0 \\ 0 & 0 & -1 \\ 0 & 1 & 0 \end{bmatrix} \qquad \xi = \begin{bmatrix} 0 \\ 0 \\ -d_1 \\ 1 \\ 0 \\ 0 \end{bmatrix} = \begin{bmatrix} 0 \\ 0 \\ -1.5 \\ 1 \\ 0 \\ 0 \end{bmatrix}$$

$$q = \begin{bmatrix} d_0 \\ d_1 \\ 0 \end{bmatrix} \qquad \xi = \begin{bmatrix} V \\ \omega \end{bmatrix}$$

3) Find the home configuration, $\mathbf{g}_{ab}(0)$, of frame B relative to frame A.

$$R_{ab} = \begin{bmatrix} 0 & 1 & 0 \\ 0 & 0 & 1 \\ 1 & 0 & 0 \end{bmatrix} \qquad g_{ab}(0) = \begin{bmatrix} 0 & 1 & 0 & d_0 \\ 0 & 0 & 1 & d_1 + d_2 \\ 1 & 0 & 0 & 0 \\ 0 & 0 & 0 & 1 \end{bmatrix} = \begin{bmatrix} 0 & 1 & 0 & 3.1 \\ 0 & 0 & 1 & 3.9 \\ 1 & 0 & 0 & 0 \\ 0 & 0 & 0 & 1 \end{bmatrix}$$

$$P_{ab} = \begin{bmatrix} d_0 \\ d_1 + d_2 \\ 0 \end{bmatrix}$$

4) The homogeneous transformation, $e^{\hat{\xi}\theta}$, that maps points from their initial coordinates in frame A to their coordinates in frame A after a rotation of θ degrees about axis $\boldsymbol{\omega}$, is shown to the right. Using Matlab, confirm that your answers above produce the same results.

$$e^{\hat{\xi}\theta} = \begin{bmatrix} 1 & 0 & 0 & 0 \\ 0 & c\theta & -s\theta & d_1(1-c\theta) \\ 0 & s\theta & c\theta & -d_1 s\theta \\ 0 & 0 & 0 & 1 \end{bmatrix}$$

$g_{ab}(\theta) = e^{\hat{\xi}\theta} g_{ab}(0)$

Same Results, All Good

5) Find the homogeneous transformation, $\mathbf{g}_{ab}(\theta)$, that maps points from frame B to frame A after a rotation of θ degrees about axis $\boldsymbol{\omega}$. Give the equation and the result here.

$$g_{ab}(\theta) = \begin{bmatrix} 1 & 0 & 0 & 0 \\ 0 & c\theta & -s\theta & d_1(1-c\theta) \\ 0 & s\theta & c\theta & -d_1 s\theta \\ 0 & 0 & 0 & 1 \end{bmatrix}\begin{bmatrix} 0 & 1 & 0 & d_0 \\ 0 & 0 & 1 & d_1 + d_2 \\ 1 & 0 & 0 & 0 \\ 0 & 0 & 0 & 1 \end{bmatrix} = \begin{bmatrix} 0 & 1 & 0 & d_0 \\ -s\theta & 0 & c\theta & d_1 + d_2 c\theta \\ c\theta & 0 & s\theta & d_2 s\theta \\ 0 & 0 & 0 & 1 \end{bmatrix}$$

$$= \begin{bmatrix} 0 & 1 & 0 & 3.1 \\ -s\theta & 0 & c\theta & 1.5 + 2.4c\theta \\ c\theta & 0 & s\theta & 2.4s\theta \\ 0 & 0 & 0 & 1 \end{bmatrix}$$

6) Using the results from 5), find the coordinates of the point, $\mathbf{r}_a(\theta)$, as a function of rotation angle.

$$\bar{r}_a(\theta) = g_{ab}(\theta)\bar{r}_b$$

$$\bar{r}_b = \begin{bmatrix} d_3 \\ 0 \\ 0 \\ 1 \end{bmatrix} \qquad \bar{r}_a(\theta) = \begin{bmatrix} 0 & 1 & 0 & d_0 \\ -s\theta & 0 & c\theta & d_1 + d_2 c\theta \\ c\theta & 0 & s\theta & d_2 s\theta \\ 0 & 0 & 0 & 0 \end{bmatrix}\begin{bmatrix} d_3 \\ 0 \\ 0 \\ 1 \end{bmatrix} = \begin{bmatrix} d_0 \\ d_1 + d_2 c\theta - d_3 s\theta \\ d_2 s\theta + d_3 c\theta \\ 1 \end{bmatrix}$$

$$= \begin{bmatrix} 3.1 \\ 1.5 + 2.4c\theta - 3.3c\theta \\ 2.4s\theta + 3.3c\theta \\ 1 \end{bmatrix}$$

7) Find the spatial velocity of the rigid motion using $\mathbf{V}_{ab}^{s} = \xi\dot{\theta}$. Confirm this by calculating $\hat{\mathbf{V}}_{ab}^{s} = \dot{\mathbf{g}}_{ab}(\theta)\mathbf{g}_{ab}^{-1}(\theta)$ in Matlab.

$$V_{ab}^{s} = \begin{bmatrix} 0 \\ 0 \\ -d_1\dot{\theta} \\ \dot{\theta} \\ 0 \\ 0 \end{bmatrix} = \begin{bmatrix} 0 \\ 0 \\ -1.5\dot{\theta} \\ \dot{\theta} \\ 0 \\ 0 \end{bmatrix}$$

Checks Out

All Good.

8) Using the results from above, find the velocity of the point, $\mathbf{v}_{r_a}(\theta)$, with respect to spatial frame A. Give the equation and the result here.

$$V_{r_a}(\theta) = \frac{d}{dt} r_a(\theta)$$

$$r_a(\theta) = \begin{bmatrix} d_0 \\ d_1 + d_2 c\theta - d_3 s\theta \\ d_2 s\theta + d_3 \cos\theta \end{bmatrix}$$

$$V_{r_a}(\theta) = \begin{bmatrix} 0 \\ (-d_2 s\theta - d_3 c\theta)\dot{\theta} \\ (d_2 c\theta - d_3 s\theta)\dot{\theta} \end{bmatrix} = \begin{bmatrix} 0 \\ (-2.4 s\theta - 3.3 c\theta)\dot{\theta} \\ (2.4 c\theta - 3.3 s\theta)\dot{\theta} \end{bmatrix}$$

9) Find the Adjoint transformation of $\mathbf{g}_{ab}^{-1}(\theta)$, $\mathrm{Ad}_{\mathbf{g}_{ab}^{-1}(\theta)}$, and use it to map the spatial velocity $\mathbf{V}_{ab}^{s}$ to the body velocity $\mathbf{V}_{ab}^{b}$. That is, find the body velocity by using $\mathrm{Ad}_{\mathbf{g}_{ab}^{-1}(\theta)}$ to transform $\mathbf{V}_{ab}^{s}$. Confirm (and explain) via inspection.

$$R = \begin{bmatrix} 0 & 1 & 0 \\ -s\theta & 0 & c\theta \\ c\theta & 0 & \sin\theta \end{bmatrix} \qquad p = \begin{bmatrix} d_0 \\ d_1 + d_2 c\theta \\ d_2 s\theta \end{bmatrix}$$

$$V_{ab}^{b} = Ad_{g_{ab}^{-1}(\theta)} V_{ab}^{s}$$

$$R^T = \begin{bmatrix} 0 & -s\theta & c\theta \\ 1 & 0 & 0 \\ 0 & c\theta & s\theta \end{bmatrix} \; ; \; \hat{p} = \begin{bmatrix} 0 & -d_2 s\theta & d_1 + d_2 c\theta \\ d_2 s\theta & 0 & -d_0 \\ -d_1 - d_2 c\theta & d_0 & 0 \end{bmatrix}$$

$$Ad_{g_{ab}^{-1}(\theta)} = \begin{bmatrix} R^T & -R^T\hat{p} \\ 0 & R^T \end{bmatrix}$$

$$V_{ab}^{b} = \begin{bmatrix} 0 & -s\theta & c\theta & d_1 c\theta + d_2 & -d_0 c\theta & -d_0 s\theta \\ 1 & 0 & 0 & 0 & d_2 s\theta & -(d_1 + d_2 c\theta) \\ 0 & c\theta & s\theta & d_1 s & -d_0 s\theta & d_0 c\theta \\ 0 & 0 & 0 & 0 & -s\theta & c\theta \\ 0 & 0 & 0 & 1 & 0 & 0 \\ 0 & 0 & 0 & 0 & c\theta & s\theta \end{bmatrix} \begin{bmatrix} 0 \\ 0 \\ -d_1\dot{\theta} \\ \dot{\theta} \\ 0 \\ 0 \end{bmatrix}$$

$$V_{ab}^{b} = \begin{bmatrix} d_2\dot{\theta} \\ 0 \\ 0 \\ 0 \\ 1 \\ 0 \end{bmatrix} = \begin{bmatrix} 2.4\dot{\theta} \\ 0 \\ 0 \\ 0 \\ 1 \\ 0 \end{bmatrix}$$