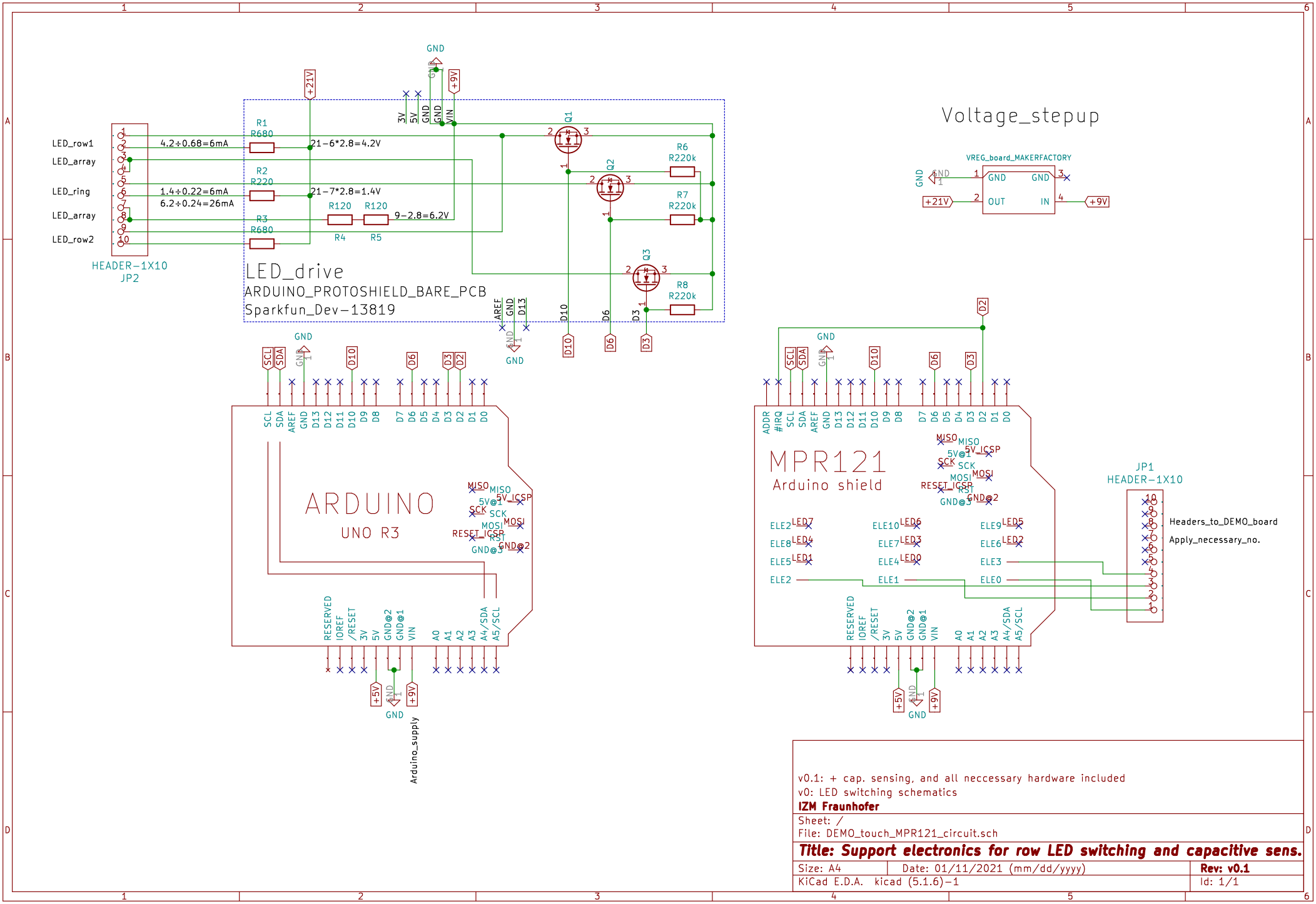
LED_drive
ARDUINO_PROTOSHIELD_BARE_PCB
Sparkfun_Dev-13819
HEADER-1X10
JP2
LED_row1
LED_array
LED_ring
LED_array
LED_row2
4.2÷0.68=6mA
1.4÷0.22=6mA
6.2÷0.24=26mA
21-6*2.8=4.2V
21-7*2.8=1.4V
9-2.8=6.2V
R1 R680
R2 R220
R3 R680
R120 R120
R4 R5
R6 R220k
R7 R220k
R8 R220k
Q1
Q2
Q3
+21V
+9V
GND
3V 5V GND GND VIN
AREF GND D13 D10 D6 D3
Voltage_stepup
VREG_board_MAKERFACTORY
GND GND
OUT IN
ARDUINO
UNO R3
SCL SDA AREF GND D13 D12 D11 D10 D9 D8 D7 D6 D5 D4 D3 D2 D1 D0
MISO 5V_ICSP
SCK
MOSI
RESET_ICSP RST
GND@3 GND@2
RESERVED IOREF /RESET 3V 5V GND@2 GND@1 VIN A0 A1 A2 A3 A4/SDA A5/SCL
+5V +9V
Arduino_supply
MPR121
Arduino shield
ADDR #IRQ SCL SDA AREF GND D13 D12 D11 D10 D9 D8 D7 D6 D5 D4 D3 D2 D1 D0
ELE2 LED7
ELE8 LED4
ELE5 LED1
ELE2
ELE10 LED6
ELE7 LED3
ELE4 LED0
ELE1
ELE9 LED5
ELE6 LED2
ELE3
ELE0
JP1
HEADER-1X10
Headers_to_DEMO_board
Apply_necessary_no.
v0.1: + cap. sensing, and all neccessary hardware included
v0: LED switching schematics
IZM Fraunhofer
Sheet: /
File: DEMO_touch_MPR121_circuit.sch
Title: Support electronics for row LED switching and capacitive sens.
Size: A4
Date: 01/11/2021 (mm/dd/yyyy)
Rev: v0.1
KiCad E.D.A. kicad (5.1.6)-1
Id: 1/1