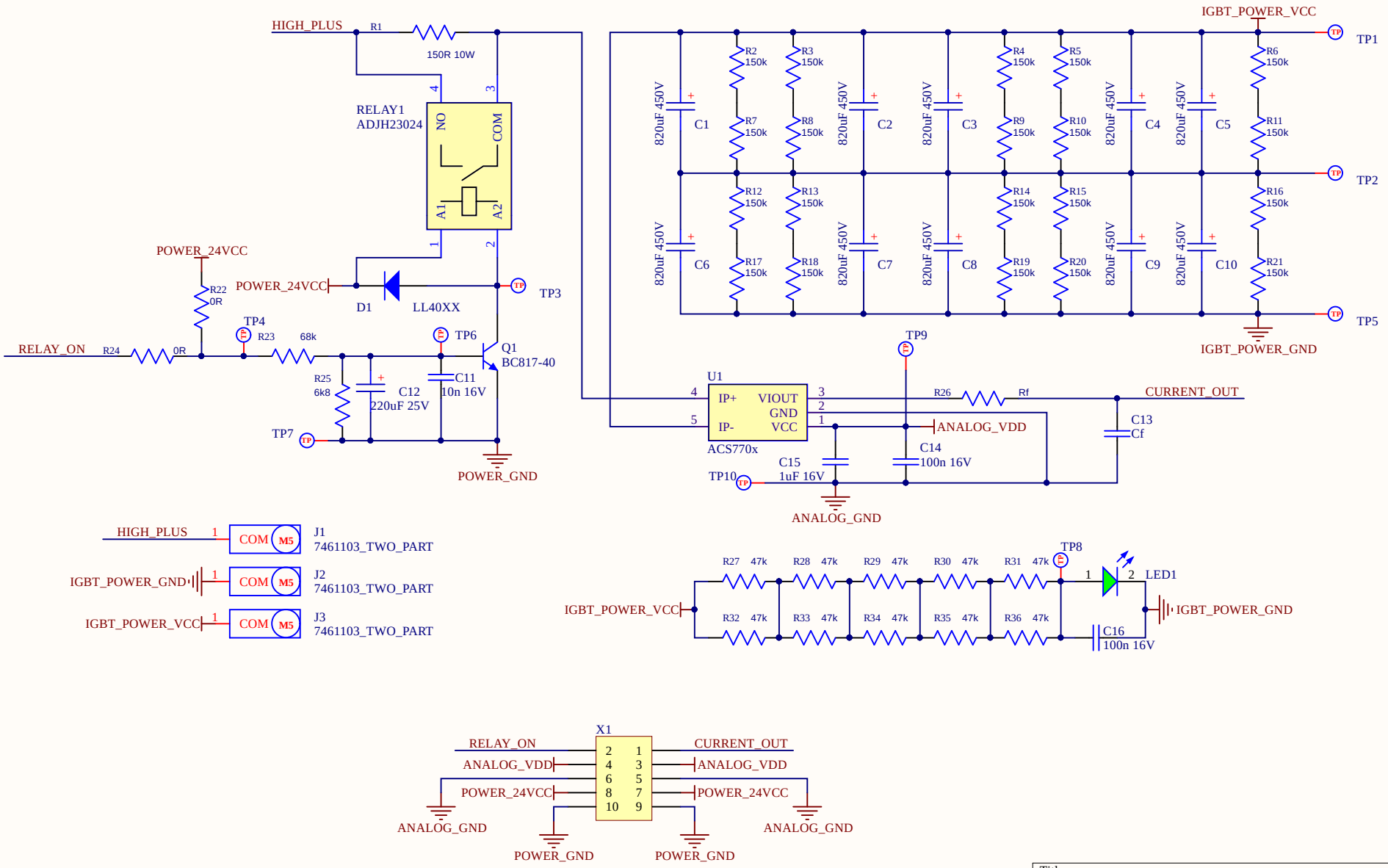

Title		
Size A4	Number	Revision
Date: 11.02.2020	Sheet of	
File: E:\Projects\..\PowerCapacityModule.SchDoc	Drawn By:	