MC3161F • MC3061F
MC3161L • MC3061L,P

This dual JK flip-flop triggers on the negative edge of clock. Each flip-flop is provided with a separate direct $\overline{SET}$ input in addition to the common direct $\overline{RESET}$ input. These direct inputs provide a means of resetting a group of flip-flops such as a register which may be followed by the presetting of a data pattern. The clock input for this device is common for both flip-flops, making it particularly useful in registers or other common clock applications.

Data may be applied to or changed at, the clocked inputs at any time during the clock cycle, except during the time interval between the Setup and Hold times. The inputs are inhibited when the clock is low and enabled when the clock rises. The input steering network continuously responds to input information when the clock is high. The data state at the inputs throughout the interval between the Set-up and Hold time is stored in the flip-flop when the clock falls. Each flip-flop may be set at any time without regard to the clock state by applying a low level to the $\overline{SET}$ input. In addition, both flip-flops may be reset simultaneously by using the common $\overline{RESET}$ in a similar manner.

LOGIC DIAGRAM
1/2 OF DEVICE SHOWN

$\overline{RESET}$ AND $\overline{CLOCK}$ COMMON TO BOTH

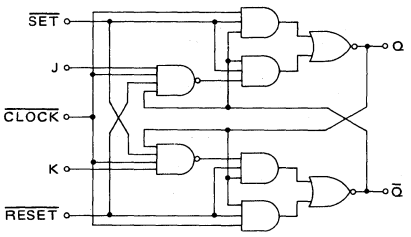

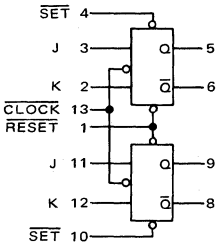

Input Loading Factors:
$\overline{SET}$ = 1.75
$\overline{RESET}$, $\overline{CLOCK}$ = 3.7
J, K = 0.75

Output Loading Factor = 10

J-K TRUTH TABLE

J	K	Q^n	Q^{n+1}
0	0	0	0
0	0	1	1
0	1	0	0
0	1	1	0
1	0	0	1
1	0	1	1
1	1	0	1
1	1	1	0

Typical Characteristics
(V_{CC} = 5.0 V; T_A = 25°C)

Total Power Dissipation = 100 mW/pkg
Toggle Frequency = 50 MHz typ
Logical "1" Setup Time = 8.0 ns
Logical "0" Setup Time = 8.0 ns
Logical "1" and "0" Hold Times = 0 ns
t_{pd-} = 12 ns
t_{pd+} = 12 ns

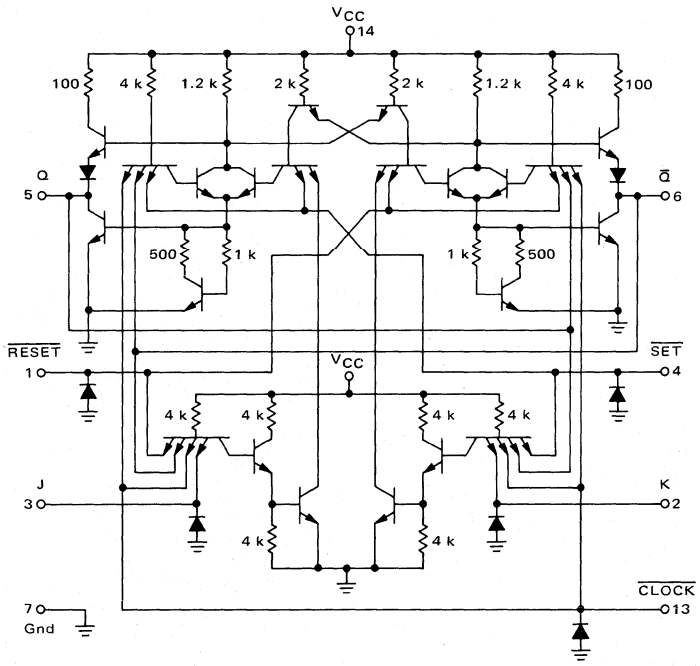

CIRCUIT SCHEMATIC
1/2 OF CIRCUIT SHOWN
(RESET AND CLOCK COMMON TO BOTH)

See General Information section for packaging.

ELECTRICAL CHARACTERISTICS

Test procedures are shown for only one flip-flop plus the inputs common to both flip-flops. To complete testing, sequence through the remaining inputs in the same manner.

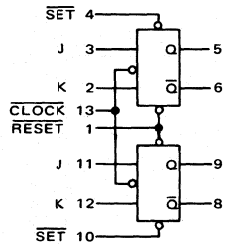

@ Test Temperature	TEST CURRENT/VOLTAGE VALUES (mA) I_{OL}	I_{OH}	I_{in}	I_D	(Volts) V_{IL}	V_{IH}	V_F	V_R	V_{RH}	V_{max}	V_{CCL}	V_{CCH}
MC3161 −55°C	20	-2.0	-	-	1.1	2.0	0.4	2.4	4.0	-	4.5	5.5
MC3161 +25°C	20	-2.0	1.0	-10	1.1	1.8	0.4	2.4	4.0	7.0	4.5	5.5
MC3161 +125°C	20	-2.0	-	-	0.8	1.8	0.4	2.4	4.0	-	4.5	5.5
MC3061 0°C	20	-2.0	-	-	1.1	2.0	0.4	2.5	4.0	-	4.75	5.25
MC3061 +25°C	20	-2.0	1.0	-10	1.1	1.8	0.4	2.5	4.0	7.0	4.75	5.25
MC3061 +75°C	20	-2.0	-	-	0.9	1.8	0.4	2.5	4.0	-	4.75	5.25

Characteristic	Symbol	Pin Under Test	MC3161 Test Limits −55°C Min	−55°C Max	+25°C Min	+25°C Max	+125°C Min	+125°C Max	MC3061 Test Limits 0°C Min	0°C Max	+25°C Min	+25°C Max	+75°C Min	+75°C Max	Unit	TEST CURRENT/VOLTAGE APPLIED TO PINS LISTED BELOW: I_{OL}	I_{OH}	I_{in}	I_D	V_{IL}	V_{IH}	V_F	V_R	V_{RH}	V_{max}	V_{CCL}	V_{CCH}	P_1*	Gnd
Input																													
Forward Current	I_{FJ}	3	-	-1.5	-	-1.5	-	-1.5	-	-1.5	-	-1.5	-	-1.5	mAdc	-	-	-	-	-	-	3	-	1,4,13	-	-	14	1	2,7
	I_{FK}	2	-	-1.5	-	-1.5	-	-1.5	-	-1.5	-	-1.5	-	-1.5	mAdc	-	-	-	-	-	-	2	-	1,4,13	-	-	14	4	3,7
	$I_{F\overline{R}}$	1	-	-3.5	-	-3.5	-	-3.5	-	-3.5	-	-3.5	-	-3.5	mAdc	-	-	-	-	-	-	1	-	3,4,10,13	-	-	14	-	2,7
	$I_{F\overline{S}}$	4	-	-1.8	-	-1.8	-	-1.8	-	-1.8	-	-1.8	-	-1.8	mAdc	-	-	-	-	-	-	4	-	1,2,13	-	-	14	-	3,7
	$I_{F\overline{C}}$	13	-	-5.7	-	-5.7	-	-5.7	-	-5.7	-	-5.7	-	-5.7	mAdc	-	-	-	-	-	-	13	-	1,2,3,11,12	-	-	14	4,10	7
Leakage Current	I_{RJ}	3	-	50	-	50	-	50	-	50	-	50	-	50	μAdc	-	-	-	-	-	-	-	3	2,4	-	-	14	-	1,7,13
	I_{RK}	2	-	50	-	50	-	50	-	50	-	50	-	50	μAdc	-	-	-	-	-	-	-	2	1,3	-	-	14	-	4,7,13
	$I_{R\overline{R}}$	1	-	200	-	200	-	200	-	200	-	200	-	200	μAdc	-	-	-	-	-	-	-	1	2	-	-	14	1	3,4,7,11,13
	$I_{R\overline{S}}$	4	-	150	-	150	-	150	-	150	-	150	-	150	μAdc	-	-	-	-	-	-	-	4	3	-	-	14	4	1,2,7,10,13
	$I_{R\overline{C}}$	13	-	300	-	300	-	300	-	300	-	300	-	300	μAdc	-	-	-	-	-	-	-	13	-	-	-	14	-	1,2,3,4,7,10,11,12
Breakdown Voltage	BV_{in}	3	-	-	5.5	-	-	-	-	-	5.5	-	-	-	Vdc	-	-	3	-	-	-	-	-	2,4	-	-	14	-	1,7,10,13
		2	-	-	↓	-	-	-	-	-	↓	-	-	-	↓	-	-	2	-	-	-	-	-	1,3	-	-	↓	-	4,7,10,13
		1	-	-	↓	-	-	-	-	-	↓	-	-	-	↓	-	-	1	-	-	-	-	-	2	-	-	↓	1	3,4,7,11,13
		4	-	-	↓	-	-	-	-	-	↓	-	-	-	↓	-	-	4	-	-	-	-	-	3	-	-	↓	4	1,2,7,10,13
		13	-	-	↓	-	-	-	-	-	↓	-	-	-	↓	-	-	13	-	-	-	-	-	-	-	-	↓	-	1,2,3,4,7,10,11,12
Clamp Voltage	V_D	3	-	-	-	-1.5	-	-	-	-	-	-1.5	-	-	Vdc	-	-	-	3	-	-	-	-	-	-	14	-	-	7,10
		2	-	-	-	↓	-	-	-	-	-	↓	-	-	↓	-	-	-	2	-	-	-	-	-	-	↓	-	-	↓
		1	-	-	-	↓	-	-	-	-	-	↓	-	-	↓	-	-	-	1	-	-	-	-	-	-	↓	-	-	↓
		4	-	-	-	↓	-	-	-	-	-	↓	-	-	↓	-	-	-	4	-	-	-	-	-	-	↓	-	-	↓
		13	-	-	-	↓	-	-	-	-	-	↓	-	-	↓	-	-	-	13	-	-	-	-	-	-	↓	-	-	↓
Output																													
Output Voltage	V_{OL}	5	-	0.4	-	0.4	-	0.4	-	0.4	-	0.4	-	0.4	Vdc	5	-	-	-	1	4	-	-	-	-	14	-	1	7,10
		6	-	0.4	-	0.4	-	0.4	-	0.4	-	0.4	-	0.4	Vdc	6	-	-	-	4	1	-	-	-	-	14	-	4	7,10
	V_{OH}	5	2.4	-	2.4	-	2.4	-	2.5	-	2.5	-	2.5	-	Vdc	-	5	-	-	4	1	-	-	-	-	14	-	4	7,10
		6	2.4	-	2.4	-	2.4	-	2.5	-	2.5	-	2.5	-	Vdc	-	6	-	-	1	4	-	-	-	-	14	-	1	7,10
Short-Circuit Current	I_{SC}	5	-20	-65	-20	-65	-20	-65	-20	-65	-20	-65	-20	-65	mAdc	-	-	-	-	-	-	-	-	-	-	-	14	-	4,5,7,10
		6	-20	-65	-20	-65	-20	-65	-20	-65	-20	-65	-20	-65	mAdc	-	-	-	-	-	-	-	-	-	-	-	14	-	1,6,7,10
Power Requirements (Total Device) Maximum Power Supply Current	I_{max}	14	-	-	-	42	-	-	-	-	-	42	-	-	mAdc	-	-	-	-	-	-	-	-	-	14	-	-	-	4,7,10
Power Supply Drain	I_{PD}	14	-	32	-	32	-	32	-	32	-	32	-	32	mAdc	-	-	-	-	-	-	-	-	-	-	-	14	-	1,7

*Momentarily ground pin prior to taking measurement. (If pin is also in another column, the pin must be returned to that voltage or current for measurement.)

OPERATING CHARACTERISTICS

High state data must be present 12 ns prior to the fall of the clock and remain until 0 ns after the clock falls.

The direct $\overline{SET}$ (individual) inputs and $\overline{RESET}$ (common) inputs may be used at any time without regard to the clock state. The flip-flop is set to the Q = 1 state by applying a low level to the $\overline{SET}$ input or reset to the Q = 0 state by applying a low level to the $\overline{RESET}$ input. If these inputs are not used they should be returned to a voltage between 2.0 and 5.5 Vdc.

Negative edge triggering — The input state during the time interval between the Setup and Hold times is stored in the flip-flop when the clock goes low. The clock fall time must be less than 50 ns.

Unused clocked inputs should be tied to the clock, to the internally connected output, or to a voltage between 2.0 and 5.5 Vdc.

MAXIMUM CLOCK FREQUENCY TEST CIRCUIT

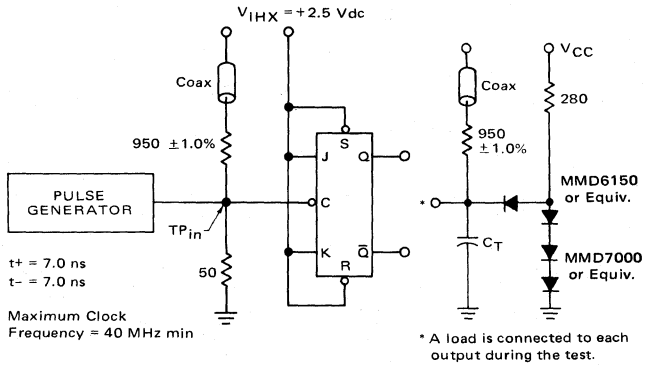

C_T = 25 pF = total parasitic capacitance, which includes probe, wiring, and load capacitances.

The coax delays from input to scope and output to scope must be matched. The scope must be terminated in 50-ohm impedance. The 950-ohm resistor and the scope termination impedance constitute a 20:1 attenuator probe. Coax shall be CT-070-50 or equivalent.

VOLTAGE WAVEFORMS AND DEFINITIONS

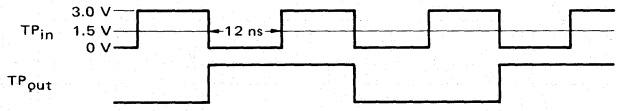

OPERATING CHARACTERISTICS (continued)

SWITCHING TIME TEST CIRCUIT

(For J Inputs and $\overline{\text{RESET}}$ Input; to test other inputs, refer to Test Procedures Chart)

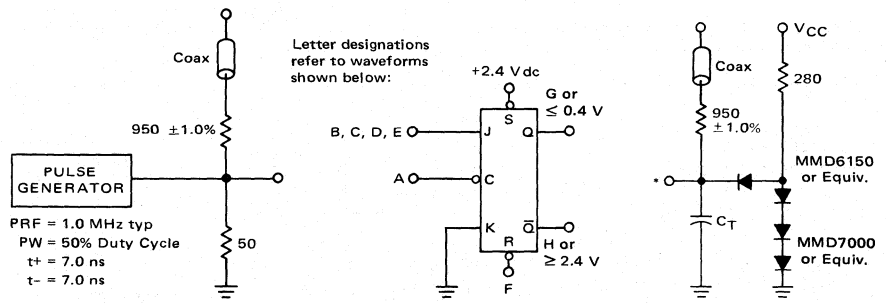

Three pulse generators are required and must be slaved together to provide the waveforms shown.

*A load is connected to each output during the test.

The coax delays from input to scope and output to scope must be matched. The scope must be terminated in 50-ohm impedance. The 950-ohm resistor and the scope termination impedance constitute a 20:1 attenuator probe. Coax shall be CT-070-50 or equivalent.

C_T = 25 pF = total parasitic capacitance, which includes probe, wiring, and load capacitances.

VOLTAGE WAVEFORMS AND DEFINITIONS

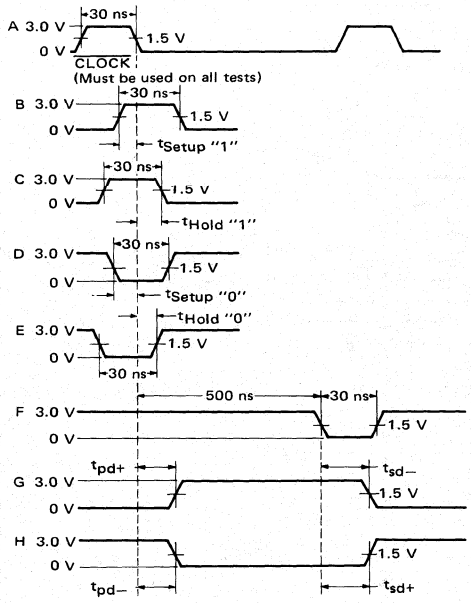

TEST PROCEDURES CHART

TEST	INPUT						LIMITS (ns)
	J*	$\overline{\text{SET}}$*	$\overline{\text{RESET}}$*	K*	Q*	Q̄*	Max
t_{Setup} "1" J	B	2.4 V	F	Gnd	G	H	15
t_{Hold} "1" J	C	2.4 V	F	Gnd	G	H	0**
t_{Setup} "0" J	D	2.4 V	F	Gnd	≤0.4 V	≥2.4 V	15
t_{Hold} "0" J	E	2.4 V	F	Gnd	≤0.4 V	≥2.4 V	0**
t_{Setup} "1" K	Gnd	F	2.5 V	B	H	G	15
t_{Hold} "1" K	Gnd	F	2.5 V	C	H	G	0**
t_{Setup} "0" K	Gnd	F	2.5 V	D	≥2.4 V	≤0.4 V	15
t_{Hold} "0" K	Gnd	F	2.5 V	E	≥2.4 V	≤0.4 V	0**
t_{pd+}	Delay from $\overline{\text{CLOCK}}$ to Q during t_{Setup} "1" J test. Delay from $\overline{\text{CLOCK}}$ to Q̄ during t_{Setup} "1" K test.						18
t_{pd-}	Delay from $\overline{\text{CLOCK}}$ to Q̄ during t_{Setup} "1" J test. Delay from $\overline{\text{CLOCK}}$ to Q during t_{Setup} "1" K test.						18
t_{sd+}	Delay from $\overline{\text{SET}}$ to Q during t_{Setup} "1" K test. Delay from $\overline{\text{RESET}}$ to Q̄ during t_{Setup} "1" J test.						18
t_{sd-}	Delay from $\overline{\text{SET}}$ to Q̄ during t_{Setup} "1" K test. Delay from $\overline{\text{RESET}}$ to Q during t_{Setup} "1" J test.						18

*Letters shown in these columns refer to waveforms shown at the left.

**t_{Hold} is typically a negative number.