EWT22A-xxxBWL22S Product Datasheet

Chengdu Ebyte Electronic Technology Co.,Ltd.

Table of contents

Disclaimer and Copyright Notice 1
Chapter1 Overview 2
1.1 Product Introduction 2
1.2 Features 2
Chapter2 Hardware Description 3
2.1 Product size and interface definition 3
2.2 Kit Pin Definition 4
Chapter 3 Frequently Asked Questions 5
3.1 The transmission distance is not ideal 5
3.2 Module is easily damaged 5
3.3 Bit error rate is too high 5
Revision History 6
About Us 6

Copyright © 2012-20 2 5 , Chengdu Ebyte Electronic Technology Co., Ltd.

Disclaimer and Copyright Notice

The information in this document, including URL references, is subject to change without notice. This document is provided "as is" without warranty of any kind, including any warranty of merchantability, fitness for a particular purpose, or non-infringement, and any warranty otherwise provided by any proposal, specification, or sample. No liability is assumed for this document, including liability for infringement of any patent arising from the use of the information in this document. This document is not hereby protected by law. No license, express or implied, to any intellectual property rights is granted by law .

The test data obtained in this article are all obtained by Ebyte laboratory testing, and the actual results may be slightly different.

All trade names, trademarks and registered trademarks mentioned herein are the property of their respective owners and are hereby acknowledged.

The final right of interpretation belongs to Chengdu Ebyte Electronic Technology Co., Ltd.

Notice:

The contents of this manual may be changed due to product version upgrades or other reasons. Ebyte Electronic Technology Co., Ltd. reserves the right to modify the contents of this manual without any notice or reminder. This manual is for guidance only. Chengdu Ebyte Electronic Technology Co., Ltd. makes every effort to provide accurate information in this manual. However, Chengdu Ebyte Electronic Technology Co., Ltd. does not guarantee that the contents of this manual are completely error-free, and all statements, information and suggestions in this manual do not constitute any express or implied warranty.

Copyright © 2012–2025 , Chengdu Ebyte Electronic Technology Co., Ltd.

Chapter1 Overview

1.1 Product Introduction

The EWT22A -xxxBWL22S series is a test suite designed based on the EWM22A - xxxBWL22S module , significantly reducing the user's development cycle. For detailed information on the EWM22A -400BWL22S and EWM22A-900BWL22S, please visit the official website to download the relevant information for these models .

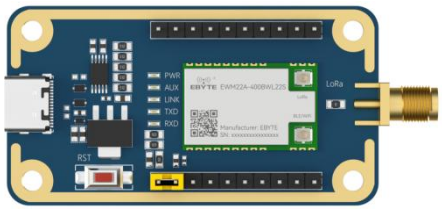

EWT22A- 400BWL22S

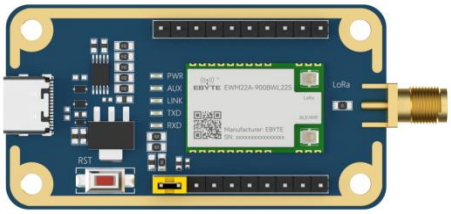

EWT22A-900BWL22S

1.2 Features

- Standard Type-C interface, plug and play;
- Rich peripherals and easy to use;
- Integrated high-performance CH340X chip;
- Support SMA-K and IPEX 1 generation antenna interface selection;
- Integrates EWM22A-400BWL22S and EWM22A-900BWL22S modules.

Copyright © 2012–2025 , Chengdu Ebyte Electronic Technology Co., Ltd.

Chapter2 Hardware Description

2.1 Product size and interface definition

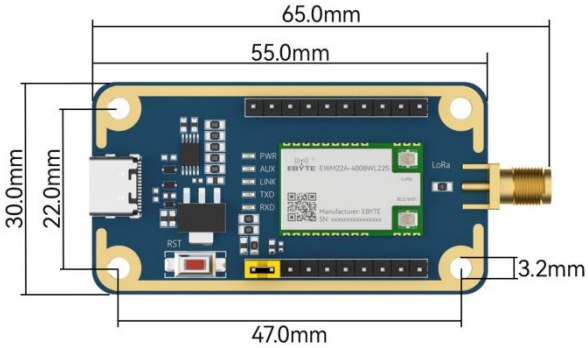

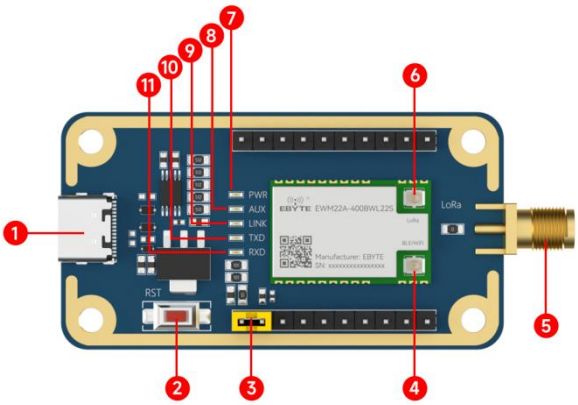

Serial number	definition	illustrate	Remark
1	Type-C	DC 5.0V power supply and communication interface	Standard Type-C interface, plug and play
2	RST	Reset button	-
3	jumper cap	Module power supply interface	Connect 3.3V and VCC pins
4	IPEX socket	IPEX 1st Generation	BLE/WiFi antenna interface
5	SMA-K	SMA-K antenna mount	LoRa antenna interface , select one of them to use, cannot use them at the same time
6	IPEX socket	IPEX 1st Generation	
7	PWR	Power indicator	-
8	AUX	LoRa working status indicator	LoRa transmit and receive buffer indication and self-test indication
9	LINK	Bluetooth/WIFI connection status indicator	BLE: Off by default, always on when BLE is connected; WIFI: Off by default, flashes at 1Hz when

Copyright © 2012–2025 , Chengdu Ebyte Electronic Technology Co., Ltd.

			WIFI is connected and TCP is not connected, and stays on when TCP is connected.
10	TXD	Serial port sending indicator	-
11	RXD	Serial port receiving indicator	-

2.2 Kit Pin Definition

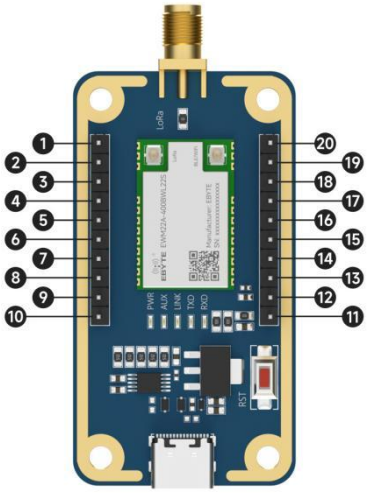

EWT22A-400BWL22S

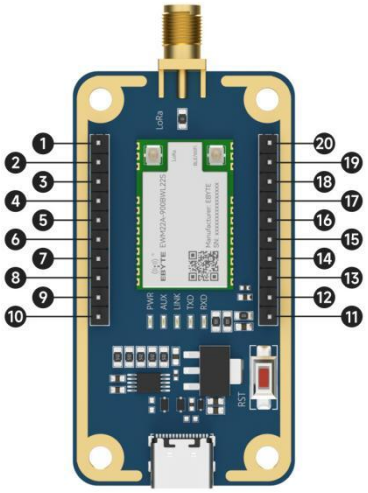

EWT22A-900BWL22S

Pin number	Pin Name	Pin direction	Pin Purpose
1	NC	-	Reserved pins
2	TX_EN	-	Reserved pins
3	RX_EN	-	Reserved pins
4	LINK	Output	Bluetooth/WIFI connection status indication pin: BLE: Default high level, BLE is connected to low level; WIFI: Default high level, WIFI is connected, TCP is not connected, output 1Hz high and low level changes, TCP is connected, output low level.
5	WAKE	enter	Deep sleep wake-up pin, low level wake-up
6	NC	Input/Output	Reserved pins
7	NC	Input/Output	Reserved pins
8	NC	Input/Output	Reserved pins
9	NC	Input/Output	Reserved pins
10	GND	-	Power ground
11	3.3V	Output	3.3V power supply, output DC 3.3V, can be connected to the VCC pin with a jumper cap for module power supply
12	VCC	enter	Module power supply pin , DC 3.0~3.6V
13	GND	-	Power ground
14	TXD	Output	TTL serial port output, connected to external RXD input pin
15	RXD	enter	TTL serial port input, connected to external TXD output pin
16	NC	-	Reserved pins

Copyright © 2012–2025 , Chengdu Ebyte Electronic Technology Co., Ltd.

17	NC	-	Reserved pins
18	AUX	Output	LoRa transceiver buffer indication and self-test indication , low level is valid
19	NC	-	Reserved pins
20	RST	enter	Reset pin, low level reset

Chapter 3 Frequently Asked Questions

3.1 The transmission distance is not ideal

- When there is a straight-line communication obstacle, the communication distance will be reduced accordingly ;
- Temperature, humidity, and co-channel interference can increase the communication packet loss rate ;
- The ground absorbs and reflects radio waves, so the test results are poor when close to the ground ;
- Seawater has a strong ability to absorb radio waves, so the test results at the seaside are poor ;
- If there are metal objects near the antenna, or if it is placed in a metal shell, the signal attenuation will be very serious ;
- The power register is set incorrectly, or the air rate is set too high (the higher the air rate, the closer the distance) ;
- The power supply voltage is lower than the recommended value at room temperature. The lower the voltage, the lower the power output .
- The antenna used does not match the module well or the antenna itself may have quality issues.

3.2 Module is easily damaged

- Please check the power supply to ensure that it is within the recommended power supply voltage. Exceeding the maximum value may cause permanent damage to the module .
- Please check the power supply stability, the voltage should not fluctuate greatly or frequently ;
- Please ensure anti-static operation during installation and use, as high-frequency components are sensitive to static electricity ;
- Please ensure that the humidity is not too high during installation and use, as some components are humidity sensitive .
- If there is no special requirement, it is not recommended to use it at too high or too low temperatures.

3.3 Bit error rate is too high

- There is interference from the same frequency signal nearby. Move away from the interference source or change the frequency or channel to avoid interference.
- An unsatisfactory power supply may also cause garbled characters, so the reliability of the power supply must be ensured;
- Poor quality or excessive length of extension cables or feeders can also cause high bit error rates.

Copyright © 2012–2025 , Chengdu Ebyte Electronic Technology Co., Ltd.

Revision History

Version	Revision Date	Revision Notes	Maintainer
1.0	2025-09-05	Initial version	Bin

About Us

Hot line:4000-330-990
Technical support: support@cdebyte.com
Thank you for using Ebyte products! Please contact us with any questions or suggestions: info@cdebyte.com
Web: https://www.cdebyte.com
Address: , Building B2, Mould Industrial Park, 199# Xiqu Ave, High-tech Zone, Chengdu, 611731, Sichuan, China

Chengdu Ebyte Electronic Technology Co.,Ltd.

Copyright © 2012–2025 , Chengdu Ebyte Electronic Technology Co., Ltd.