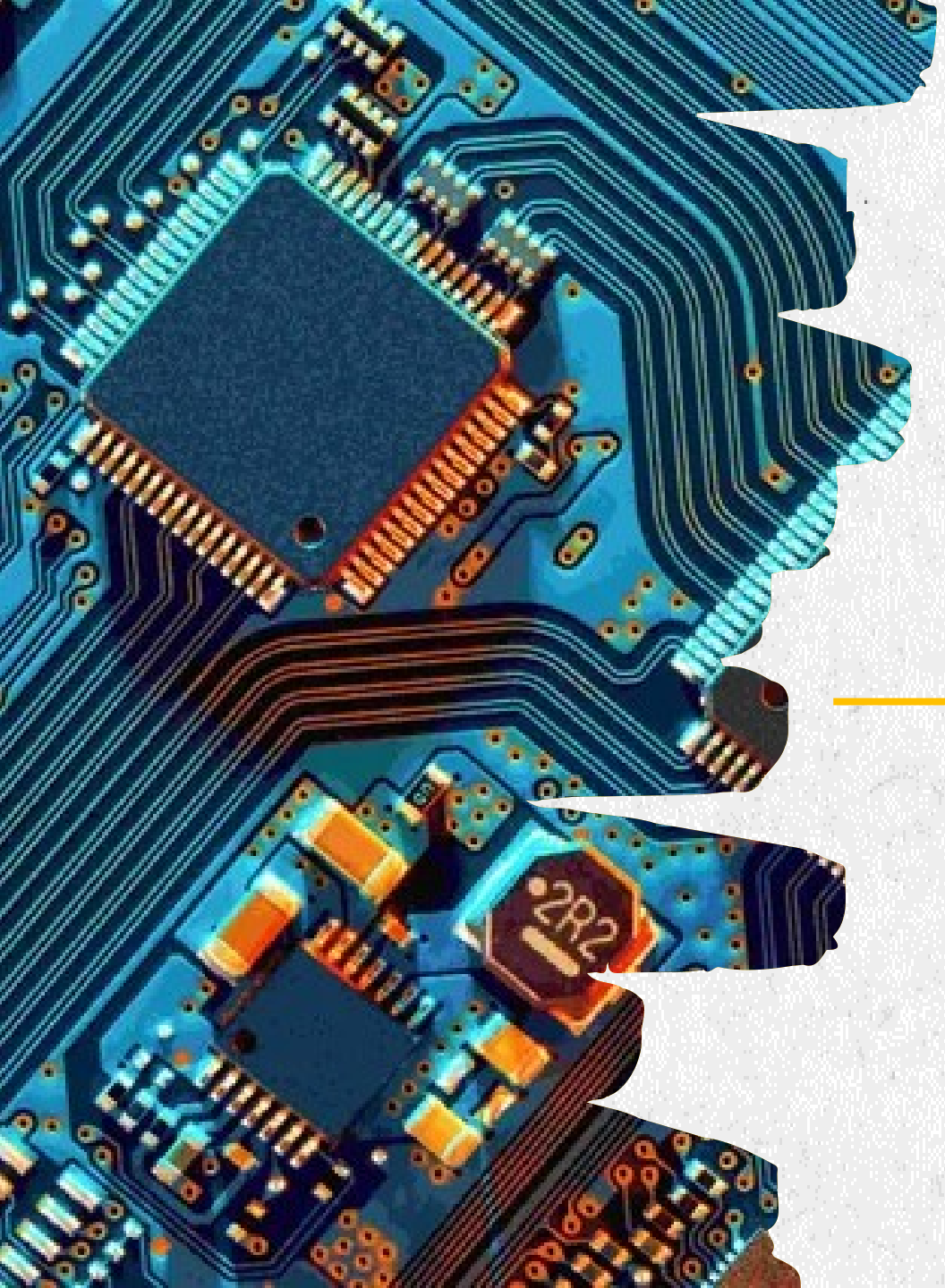

CHAPTER 6

BIPOLAR JUNCTION TRANSISTOR (BJT)

BIPOLAR JUNCTION TRANSISTOR (BJT)

- The invention of the *transistor (電晶體)* was the *beginning of a technological revolution (科技革命)*. All of the *complex electronic devices and systems* today are an outgrowth of early developments in *semiconductor transistors*.
- Two basic types of transistors include:
  1. **Bipolar Junction Transistors (BJTs、雙載子連接電晶體)** – discussed in Ch. 6~7
  2. **Field-Effect Transistors (FETs、場效電晶體)** – discussed in Ch. 8

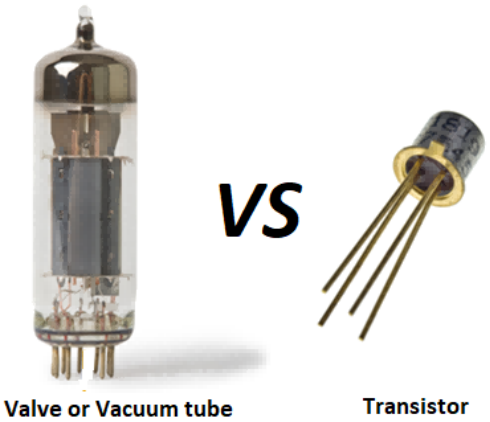

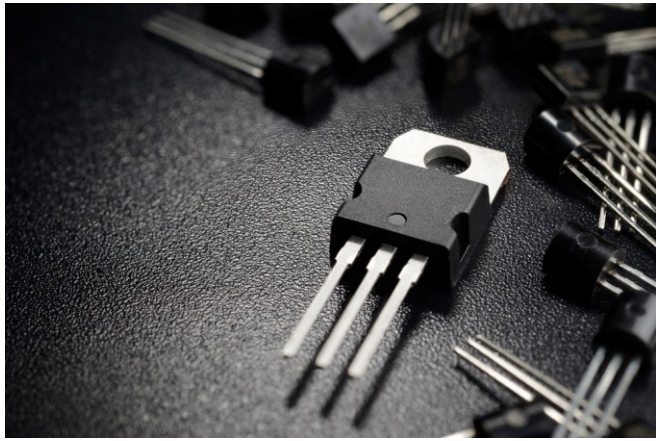

BJT STRUCTURE

- The ***BJT*** is constructed with ***three regions*** *of doped semiconductor separated by* ***two pn junctions***. The three regions are called ***emitter (E、射極), base (B、基極), and collector (C、集極).***
- There are two types of BJTs: (1) NPN and (2) PNP.

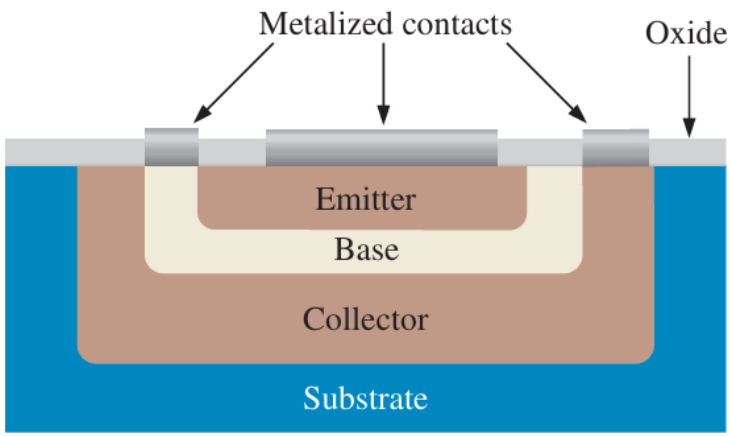

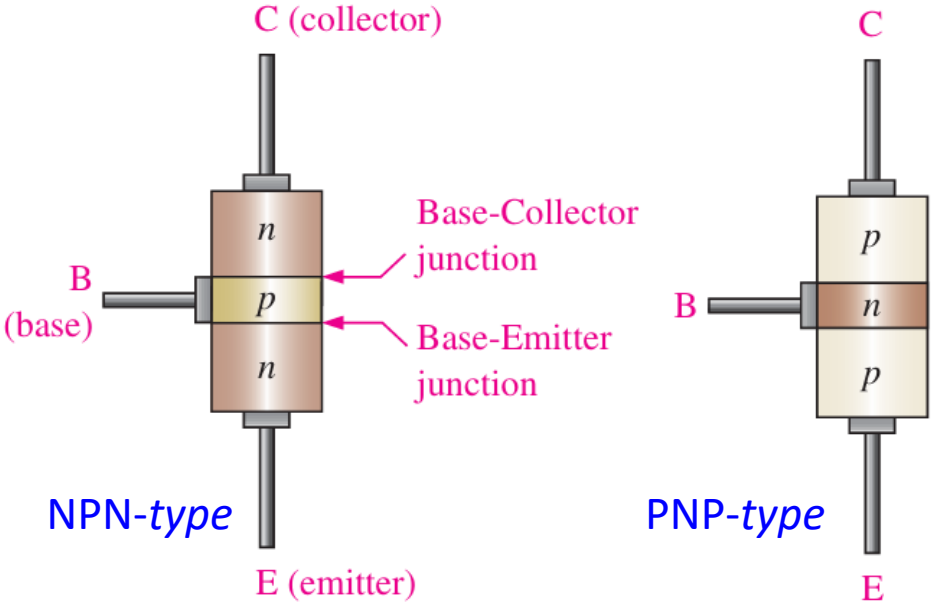

BJT STRUCTURE

- The *pn* junction joining the ***base (B、基極) region*** *and* ***the emitter (E、射極) region*** is called the ***base-emitter (BE)*** *junction*.
- The *pn* junction joining the ***base (B、基極) region*** *and* ***the collector (C、集極) region*** is called the ***base-collector (BC)*** *junction*.

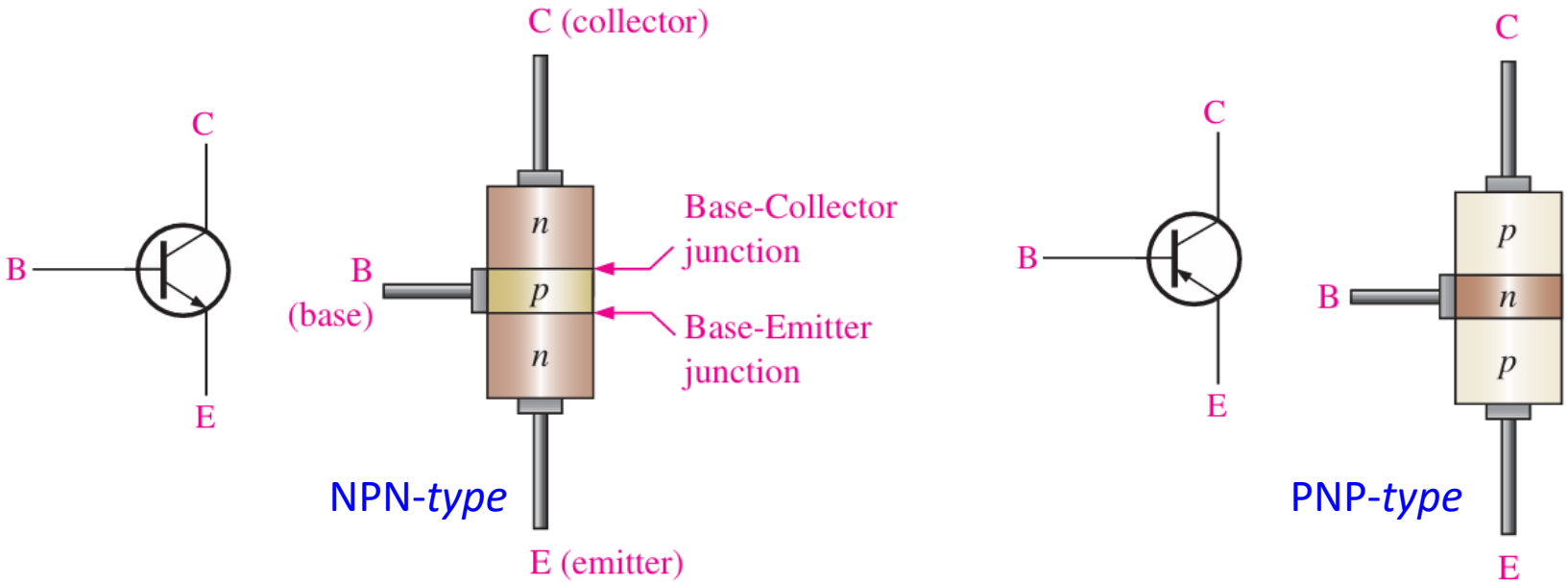

BIASING

- The examples use BJTs as an amplifier 放大器.
- Notice that in both cases the base-emitter (BE) junction is forward-biased 順向偏壓 and the base-collector (BC) junction is reverse-biased 逆向偏壓 .
- This condition is called *forward-reverse bias* (順逆向偏壓).

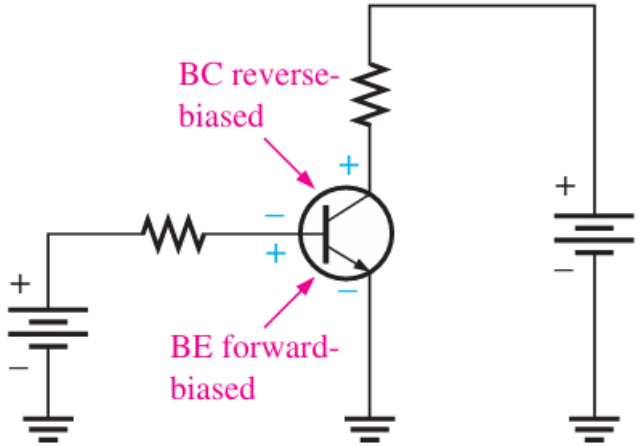

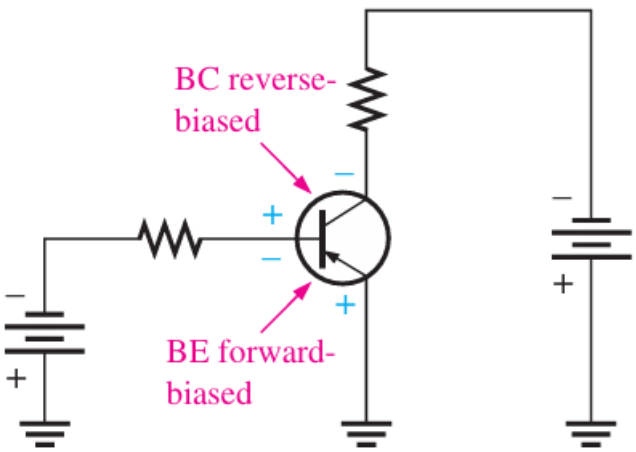

➢ Note that most of examples discussed *in this course* are *NPN-type BJTs*.

OPERATIONS

- The *main purpose of BJTs* is to use a small current 小電流 at the base 射極 to control much larger current 大電流 between the collector 集極 and emitter 射極.
- When a small positive voltage is applied to the *BE junction (forward-biased)*, *it allows electrons to flow from the emitter (E) into the base (B).*
- Since the base is thin and lightly doped, *most of these electrons (電子) diffuse into the collector*, which is at ***a higher voltage***, creating ***a larger collector current***.

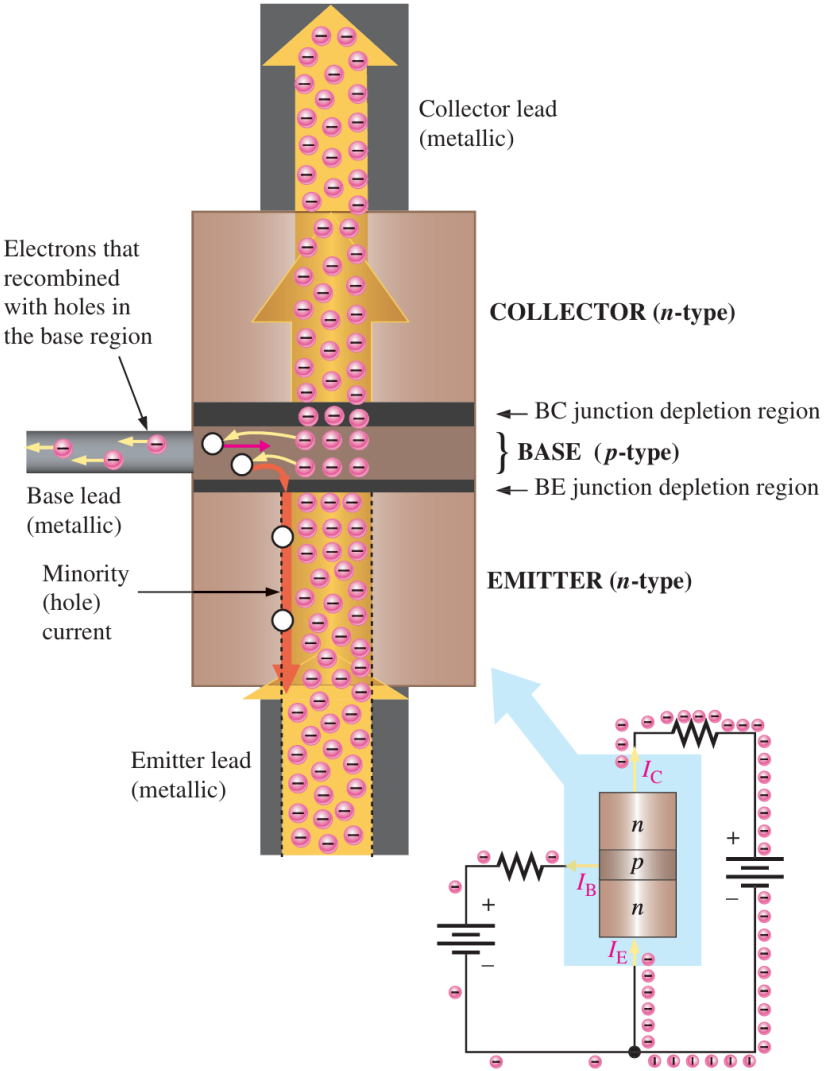

Animation: https://www.youtube.com/watch?v=7ukDKVHnac4

TRANSISTOR CURRENTS

- When both types of BJTs are operating, the current directions are shown as follows:

$$I_E = I_B + I_C$$

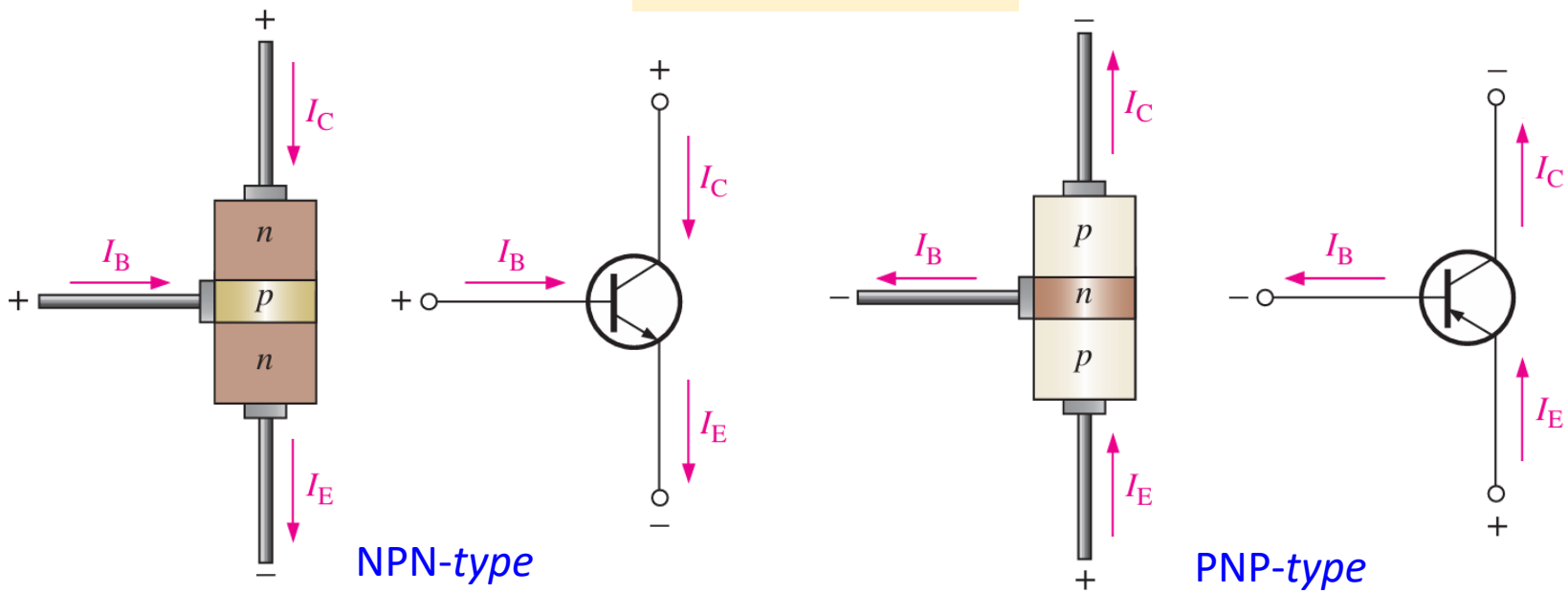

➢ Note that I_B is very small compared to I_C or I_E. ($I_B << I_C$ or I_E)

BETA AND ALPHA GAINS

- In transistors, there are *two DC current gains 電流增益*:

1. Beta (β_{DC}) gain 增益 is the ratio 比值 of I_C to I_B:

$$\beta_{DC} = \frac{I_C}{I_B}$$

- Typical values of β_{DC} (called h_{FE} in datasheets) range from less than 20 to 200 or higher.

2. Alpha (α_{DC}) gain 增益 is the ratio 比值 of I_C to I_E:

$$\alpha_{DC} = \frac{I_C}{I_E}$$

- Typically, values of α_{DC} range from 0.95 to 0.99 or greater, but α_{DC} is always less than 1.

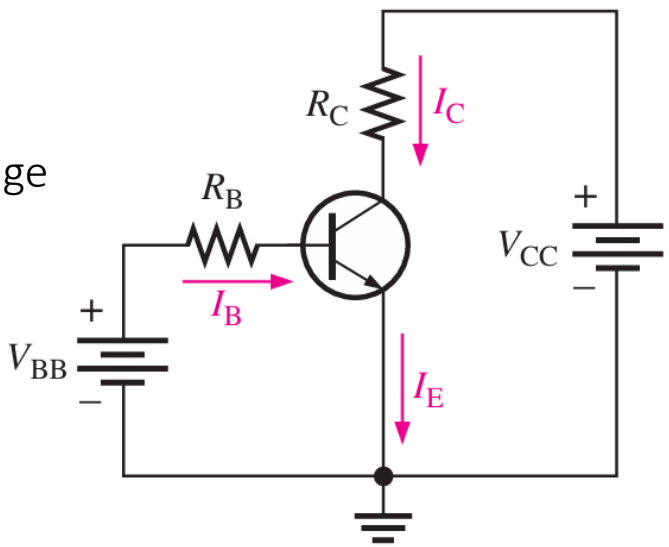

EXERCISE

- Determine the DC current gains β_{DC}, α_{DC}, and the emitter current I_E for a transistor where $I_B = 50\ \mu\text{A}$ and $I_C = 3.65\ \text{mA}$.

TRANSISTOR DC MODEL

- When the BJT is *unsaturated* (不飽和), it can be approximated as a *diode (二極體)* with a current input and a *dependent current source 相依電流源* in the output circuit.

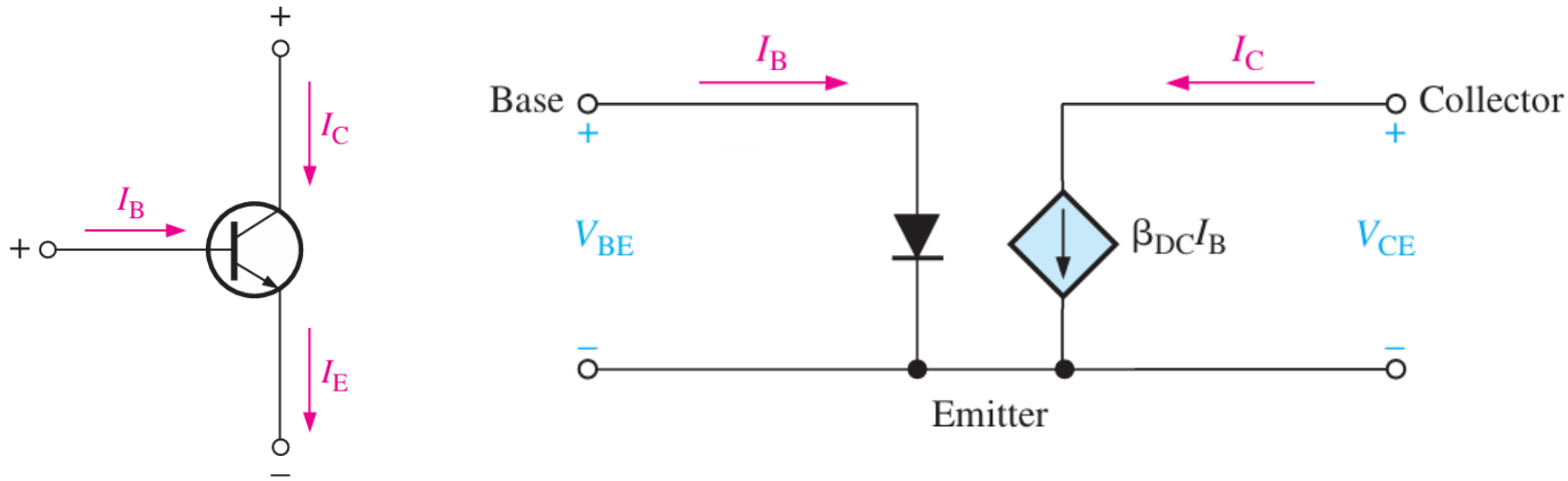

- When the *diode is forward-biased (順向)*, the output current I_C is proportional to I_B with the gain β_{DC}.

BJT CIRCUIT ANALYSIS

- When the ***BE junction is forward-biased***, it is like a forward-biased diode and has a nominal forward voltage drop of

$$V_{BE} \cong 0.7\,V$$

- By Kirchhoff's law 克希荷夫電路定律, you can have:

$$I_B = \frac{V_{BB} - V_{BE}}{R_B}$$

$$V_{CE} = V_{CC} - I_C R_C$$
$$V_{CE} = V_{CC} - (\beta_{DC} I_B) R_C$$

$$V_{CB} = V_{CE} - V_{BE}$$

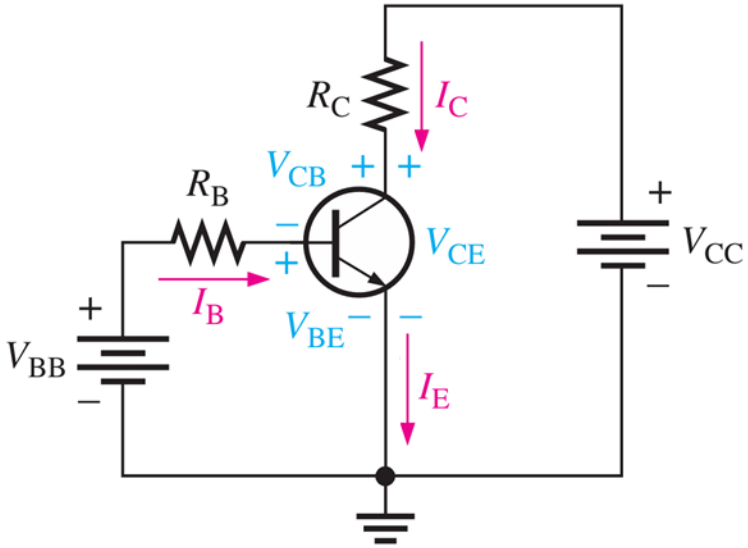

EXERCISE

- Given $\beta_{DC} = 150$, determine I_B, I_C, I_E, V_{BE}, V_{CE}, and V_{CB} in the circuit.

$$I_B = \frac{V_{BB} - V_{BE}}{R_B} = \frac{5 - 0.7}{10k} = 430\ \mu A$$

$$I_C = \beta_{DC} I_B = (150)(430\mu) = 64.5\ mA$$

$$I_E = I_B + I_C = 64.5m + 0.43m = 64.93\ mA$$

$$V_{BE} = 0.7\ V$$

$$V_{CE} = V_{CC} - I_C R_C = 10 - (64.5m)(100) = 3.55\ V$$

$$V_{CB} = V_{CE} - V_{BE} = 3.55 - 0.7 = 2.85\ V$$

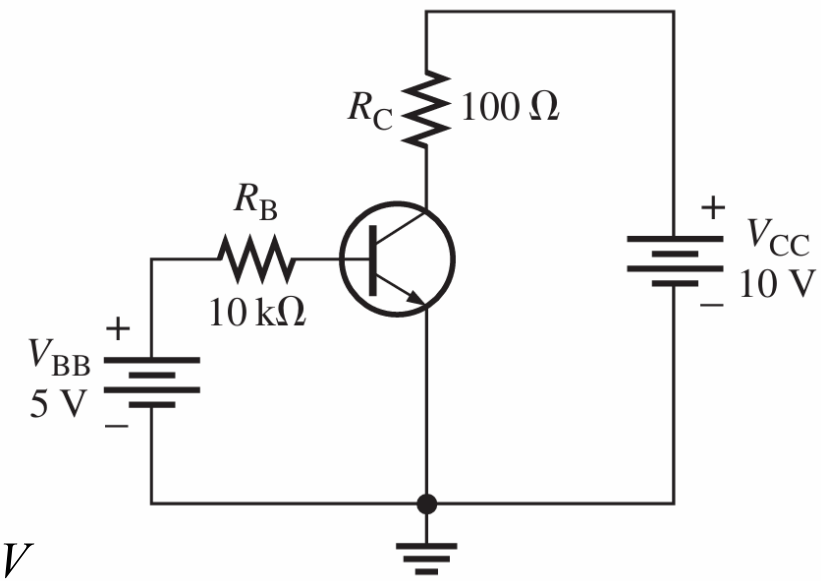

CHARACTERISTIC CURVE

- Varying V_{BB} and V_{CC} to control I_B and I_C, respectively, a set of *BJT characteristic curves* I-V特性曲線圖 can be plotted.

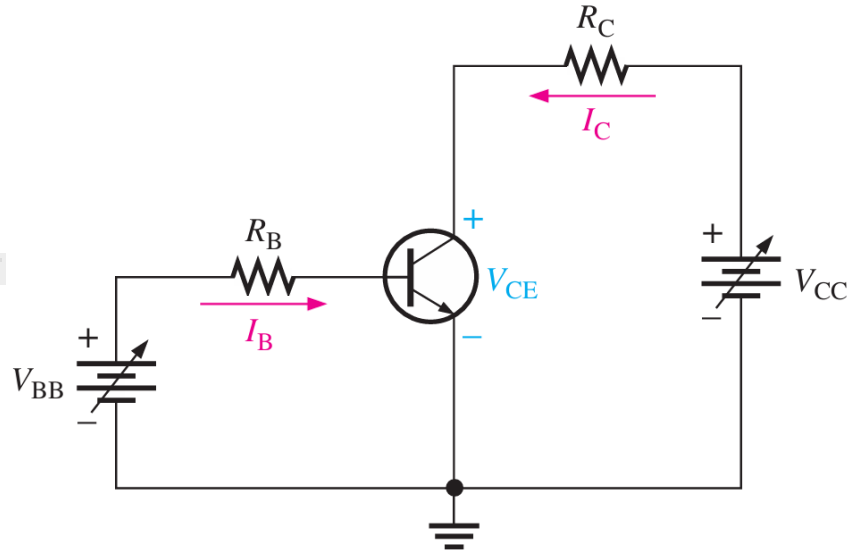

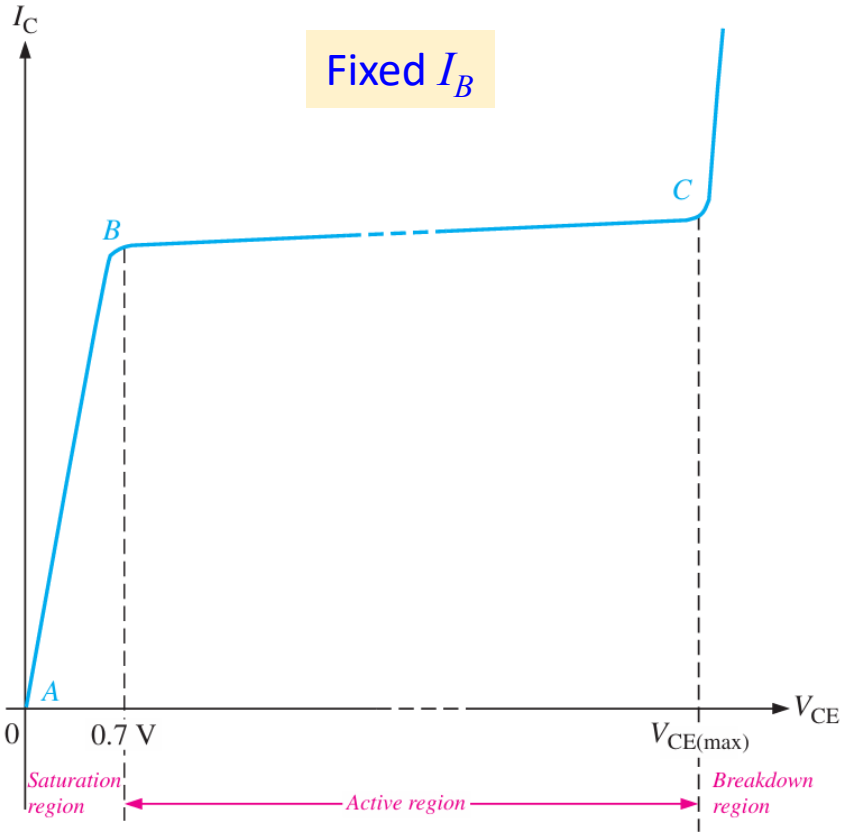

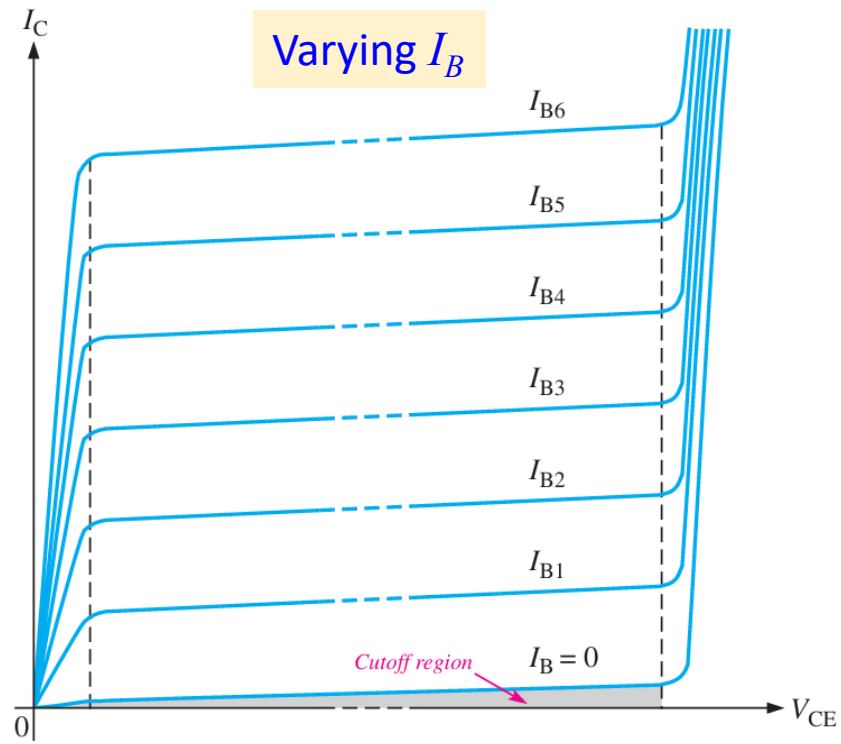

OPERATION MODES OF BJT

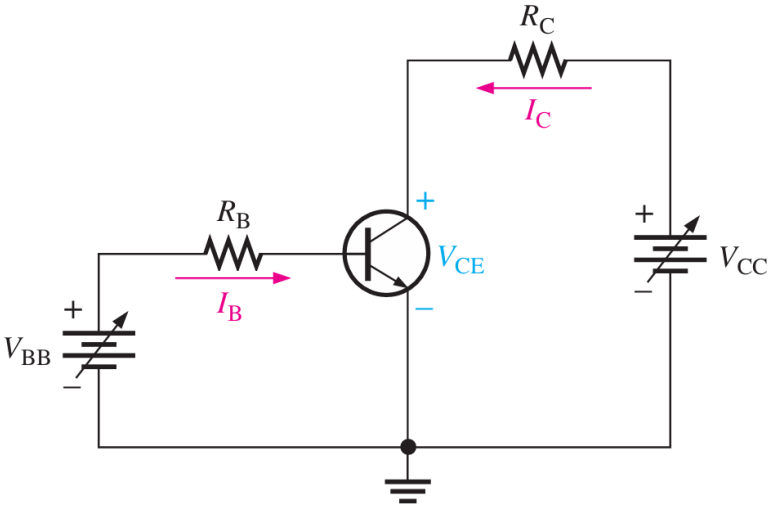

- BJTs have 3 operation modes:

1. *Cutoff mode 截止區 (Off state)*:
   - Both the *BE and BC junctions* are *reverse-biased 逆向*.
   - *No current* flows from collector to emitter ($I_C \approx 0$).
   - The transistor behaves like an *open switch 開路*.

❖ Conditions:

$$V_{BE} < V_{BE(ON)}$$
$$I_B \approx 0, \quad I_C \approx 0$$

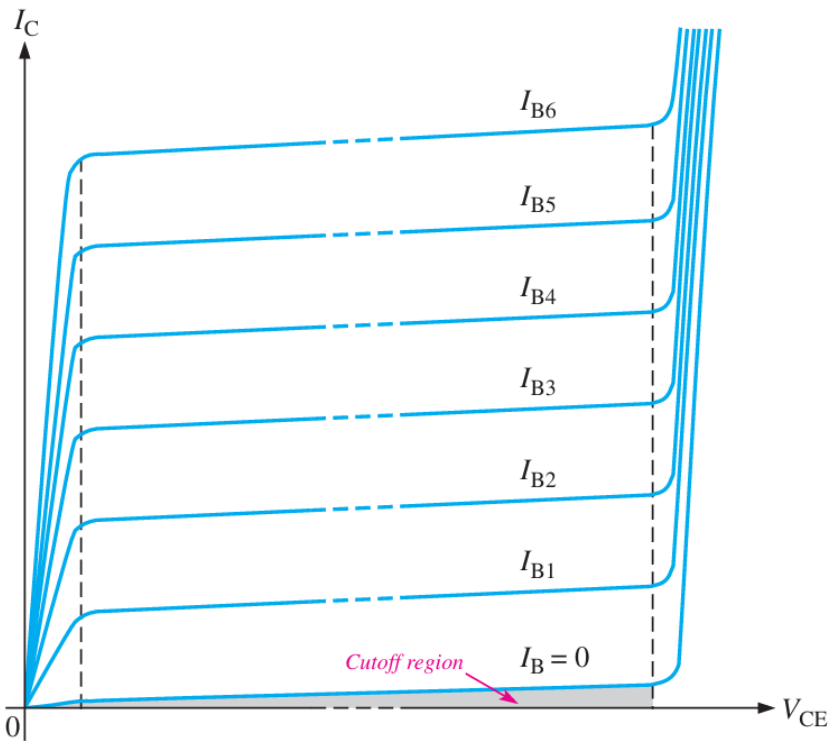

OPERATION MODES OF BJT

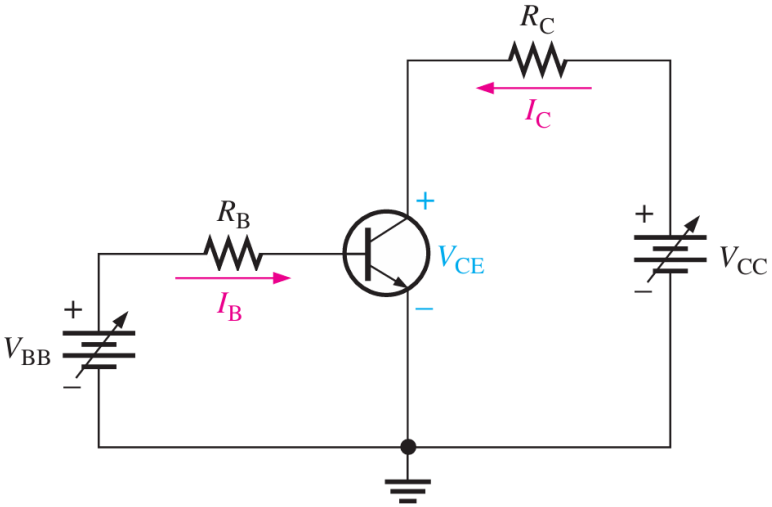

- BJTs have 3 operation modes:

2. *Active mode 主動區 (Amplification)*:

- The *BE junction is forward-biased 順向*, while the *BC junction is reverse-biased 逆向*.
- The transistor behaves like *an amplifier 放大器*, where is I_C proportional to I_B according to the gain β_{DC}.

❖ Conditions:

$$V_{BE} = 0.7\,V, \quad V_{CE} > V_{BE}$$
$$I_C = \beta_{DC} I_B$$

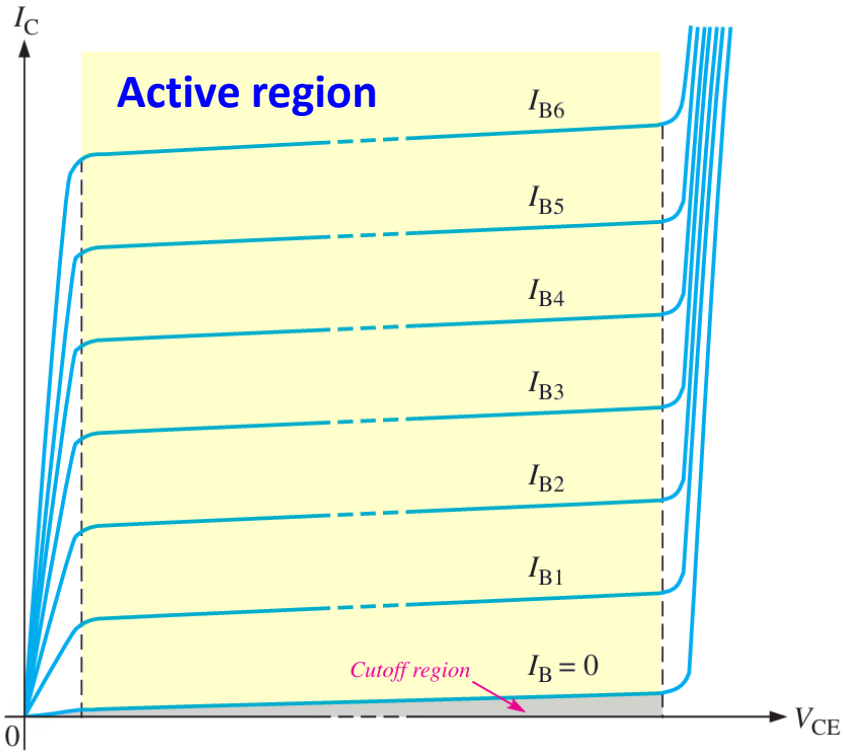

OPERATION MODES OF BJT

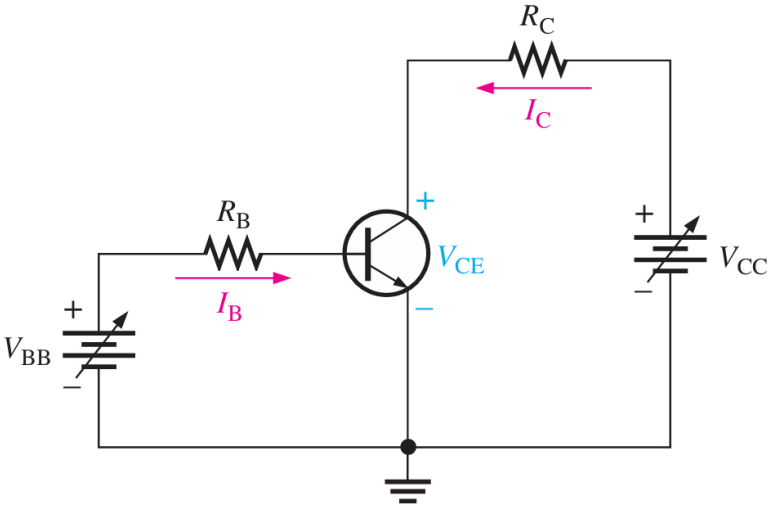

- BJTs have 3 operation modes:

3. Saturation mode 飽和區 (On state):

- ➢ Both the *BE and BC junctions are forward-biased 順向*.
- ➢ The transistor acts like a *closed switch 通路*, but I_C is less than $\beta_{DC} I_C$.

❖ Conditions:

$$V_{BE} = 0.7\,V, \quad V_{BE} > V_{CE}$$
$$I_C < \beta_{DC} I_B$$

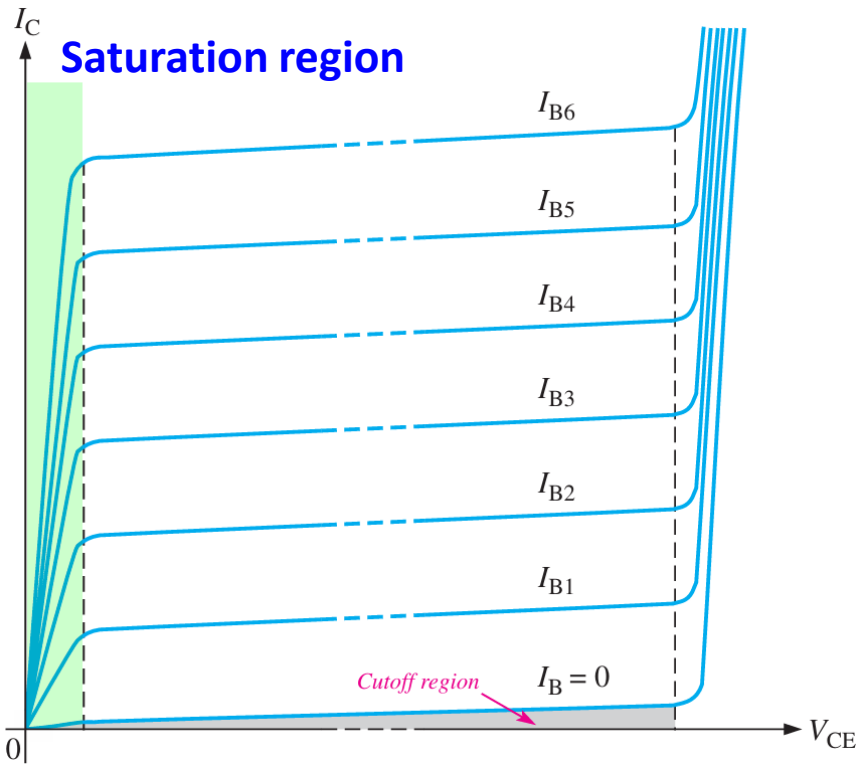

DC LOAD LINE

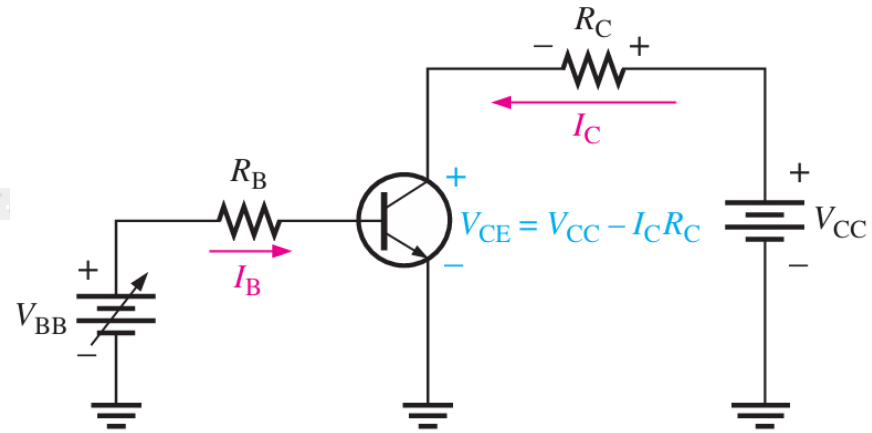

- To better understand about the transition of the 3 modes, let us see the *DC load line* 直流電負載線, where V_{CC} is fixed and V_{BB} is modified to increase I_B.

1. At "*Cutoff* 截止", $I_B = 0$, both BE and BC junctions are reverse-biased, acting as an open switch $\rightarrow V_{CE} = V_{CC}$ and $I_C = 0$.
2. At between "*Active* 主動", as I_B increases, I_C is proportionally increased, while V_{CE} decreases $\rightarrow V_{CE} << V_{CC}$ and $I_C = \beta_{DC} I_B$.
3. At "*Saturation* 飽和", I_B is larger than need for active mode $\rightarrow V_{CE} = V_{CE(sat)}$ and $I_C = I_{C(sat)}$.

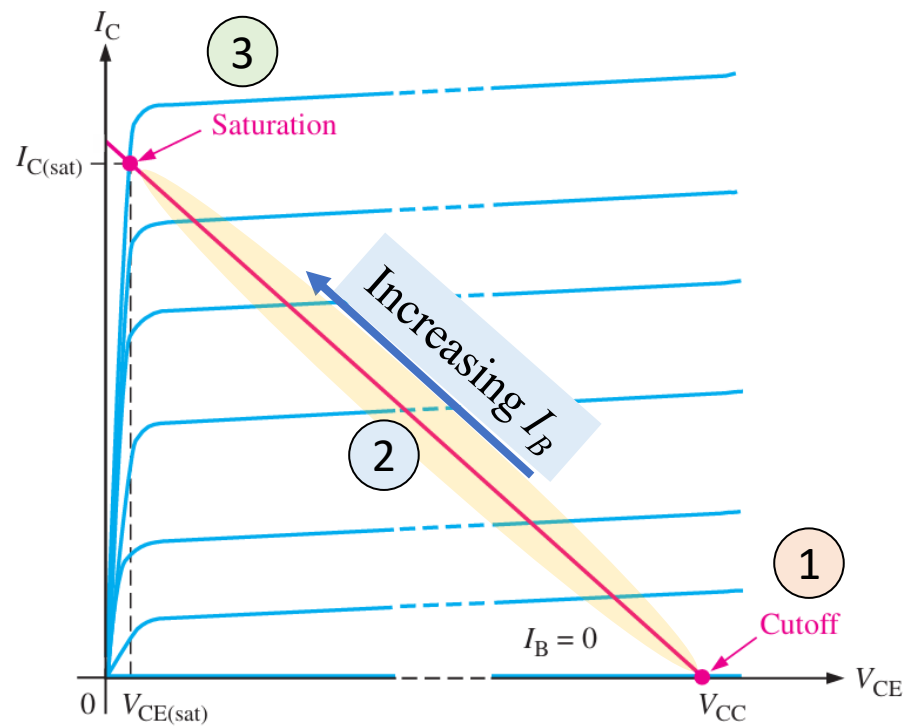

EXAMPLE

- Determine **whether or not** the transistor is in **saturation**.
  Assume $V_{CE(\text{sat})} = 0.2\ \text{V}$.

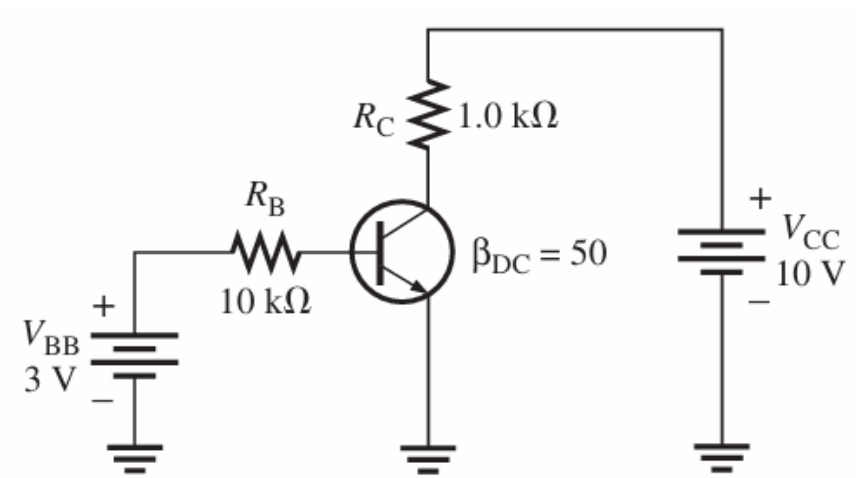

Step 1:

$$I_B = \frac{V_{BB} - V_{BE}}{R_B} = \frac{3 - 0.7}{10k} = 2.3 \quad mA$$

$$I_C = \beta_{DC} I_B = (50)(2.3m) = 11.5 \quad mA$$

Step 2:

$$I_{C(\text{sat})} = \frac{V_{CC} - V_{CE(\text{sat})}}{R_C} = \frac{10 - 0.2}{1k} = 9.8 \quad mA$$

Step 3: $I_C > I_{C(\text{sat})} \quad \rightarrow \quad$ The transistor is in saturation.

EXAMPLE

- Determine **whether or not** the transistor is in **saturation**. Assume $V_{CE(\text{sat})} = 0.2\ \text{V}$.

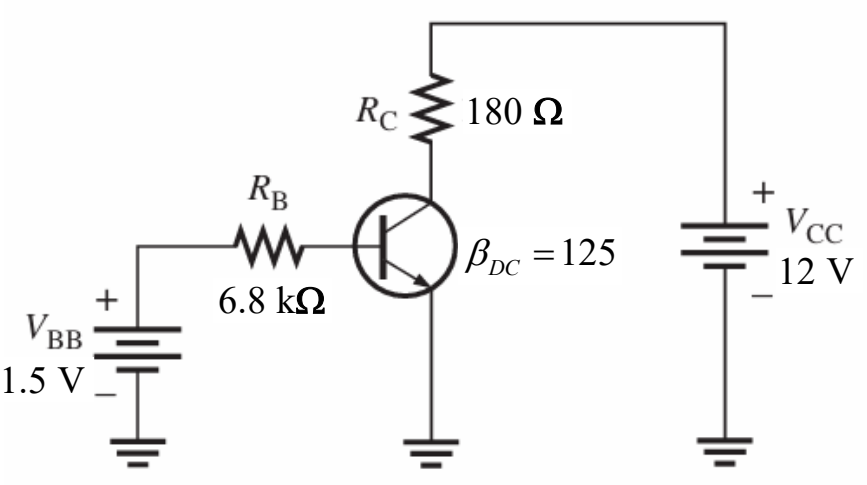

FAIRCHILD SEMICONDUCTOR™

2N3904 MMBT3904 PZT3904

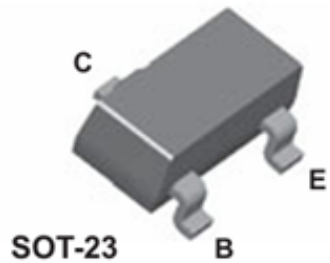

SOT-23
Mark: 1A

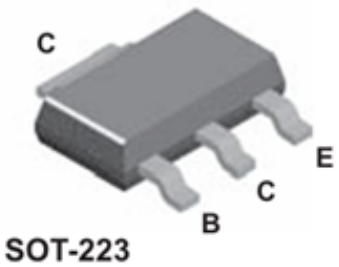

SOT-223

NPN General Purpose Amplifier

This device is designed as a general purpose amplifier and switch. The useful dynamic range extends to 100 mA as a switch and to 100 MHz as an amplifier.

Absolute Maximum Ratings*

T_A = 25°C unless otherwise noted

Symbol	Parameter	Value	Units
V_{CEO}	Collector-Emitter Voltage	40	V
V_{CBO}	Collector-Base Voltage	60	V
V_{EBO}	Emitter-Base Voltage	6.0	V
I_C	Collector Current - Continuous	200	mA
T_J, T_{stg}	Operating and Storage Junction Temperature Range	-55 to +150	°C

*These ratings are limiting values above which the serviceability of any semiconductor device may be impaired.

NOTES:

1) These ratings are based on a maximum junction temperature of 150 degrees C.

Electrical Characteristics

T_A = 25°C unless otherwise noted

Symbol	Parameter	Test Conditions	Min	Max	Units
OFF CHARACTERISTICS					
$V_{(BR)CEO}$	Collector-Emitter Breakdown Voltage	I_C = 1.0 mA, I_B = 0	40		V
$V_{(BR)CBO}$	Collector-Base Breakdown Voltage	I_C = 10 μA, I_E = 0	60		V
$V_{(BR)EBO}$	Emitter-Base Breakdown Voltage	I_E = 10 μA, I_C = 0	6.0		V
I_{BL}	Base Cutoff Current	V_{CE} = 30 V, V_{EB} = 3V		50	nA
I_{CEX}	Collector Cutoff Current	V_{CE} = 30 V, V_{EB} = 3V		50	nA
ON CHARACTERISTICS*					
h_{FE}	DC Current Gain	I_C = 0.1 mA, V_{CE} = 1.0 V I_C = 1.0 mA, V_{CE} = 1.0 V I_C = 10 mA, V_{CE} = 1.0 V I_C = 50 mA, V_{CE} = 1.0 V I_C = 100 mA, V_{CE} = 1.0 V	40 70 100 60 30	 300	
$V_{CE(sat)}$	Collector-Emitter Saturation Voltage	I_C = 10 mA, I_B = 1.0 mA I_C = 50 mA, I_B = 5.0 mA		0.2 0.3	V V
$V_{BE(sat)}$	Base-Emitter Saturation Voltage	I_C = 10 mA, I_B = 1.0 mA I_C = 50 mA, I_B = 5.0 mA	0.65	0.85 0.95	V V
SMALL SIGNAL CHARACTERISTICS					
f_T	Current Gain - Bandwidth Product	I_C = 10 mA, V_{CE} = 20 V, f = 100 MHz	300		MHz
C_{obo}	Output Capacitance	V_{CB} = 5.0 V, I_E = 0, f = 1.0 MHz		4.0	pF
C_{ibo}	Input Capacitance	V_{EB} = 0.5 V, I_C = 0, f = 1.0 MHz		8.0	pF
NF	Noise Figure	I_C = 100μA, V_{CE} = 5.0 V, R_S =1.0kΩ,f=10 Hz to 15.7kHz		5.0	dB
SWITCHING CHARACTERISTICS					
t_d	Delay Time	V_{CC} = 3.0 V, V_{BE} = 0.5 V,		35	ns

BASIC APPLICATIONS OF BJTS

- As learned, BJTs have 3 modes: (1) cutoff 截止, (2) active 主動, and (3) saturation 飽和.
- Two basic applications of BJTs are (i) signal amplification 訊號放大 and (ii) signal switching 訊號開關

(i) *Signal amplification 訊號放大* – BJTs operate in the *active mode*, where a small signal is amplified to a larger collector signal by gain β_{DC}.

(ii) *Signal switching 訊號開關* – BJTs operate between the *cutoff (OFF) and saturation (ON) modes*, where the small signal can control the switch.

SIGNAL AMPLIFICATION BY BJTS

- Let this example show the signal amplification 訊號放大 by a BJT.
- An AC voltage V_s is superimposed on the DC bias voltage V_{BB} by *capacitive coupling* 電容耦合. The forward-biased BE junction presents a very low resistance r'_e to the AC signal.

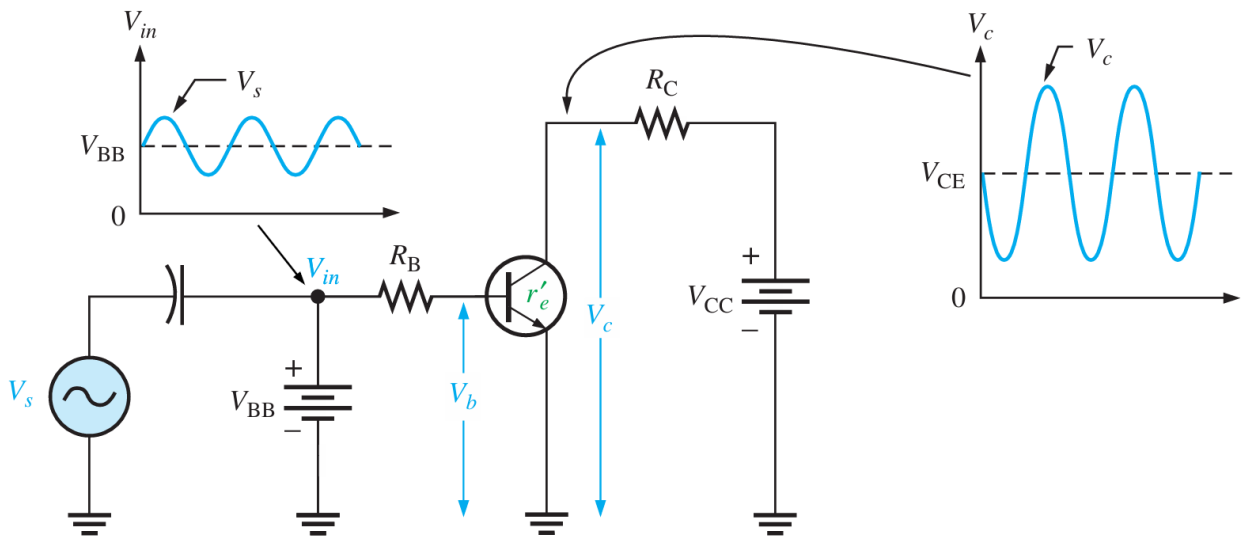

$$V_c = \frac{R_C}{r'_e} V_b = A_v V_b$$

AC voltage gain
(discussed next Chapter)

SIGNAL SWITCHING BY BJTS

- In the *cutoff region* 截止區, the BE junction is not forward-biased; thus, there is an ***open circuit*** 開路 between collector and emitter.
- In the *saturation region* 飽和區, the BE and BC junctions are forward-biased; thus, there is ***a close circuit*** 通路 between collector and emitter.

➢ Indeed, a *small voltage drop across the transistor*, which is the saturation voltage, $V_{CE(\text{sat})}$.

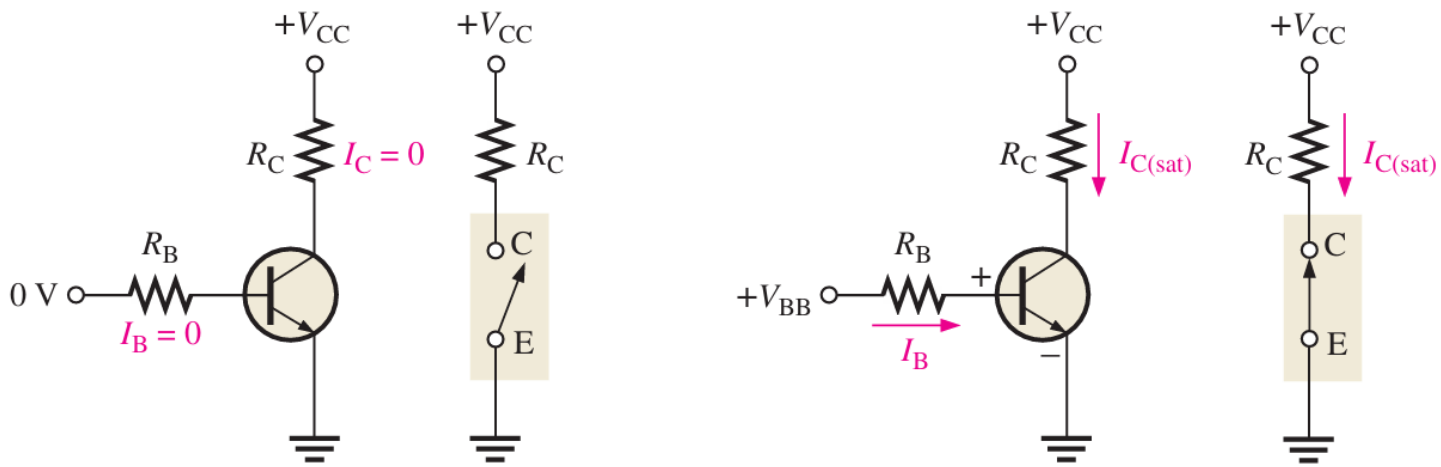

(a) Cutoff — open switch

(b) Saturation — closed switch

SIGNAL SWITCHING BY BJTS

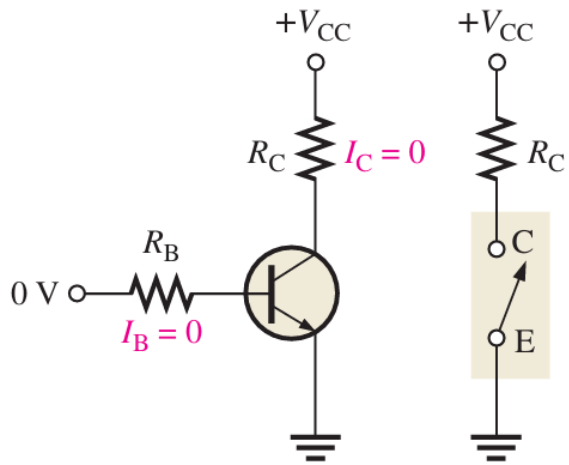

(a) Cutoff — open switch

Conditions in Cutoff

$$V_{CE} = V_{CC}$$

$$I_C = 0$$

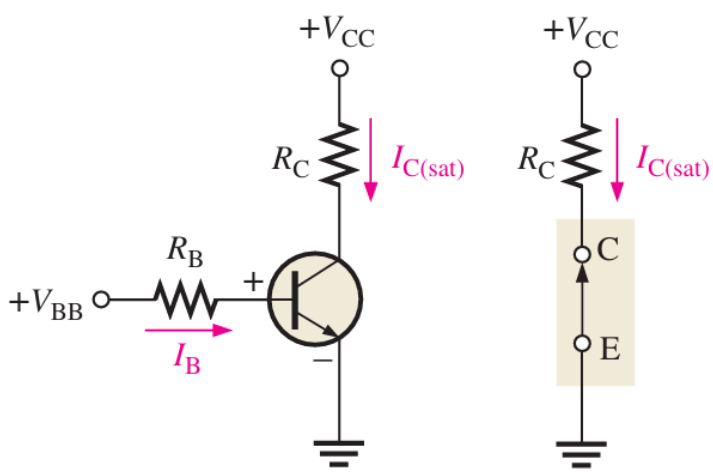

(b) Saturation — closed switch

Conditions in Saturation

$$I_{C(\text{sat})} = \frac{V_{CC} - V_{CE(\text{sat})}}{R_C}$$

$$I_{B(\min)} = \frac{I_{C(\text{sat})}}{\beta_{DC}}; \quad V_{CE} = V_{CE(\text{sat})}$$

EXAMPLE

1. When $V_{IN} = 0$, what is V_{CE}?
2. What minimum value of I_B is required to saturate this transistor if $\beta_{DC} = 200$? (Assume $V_{CE}(\text{sat}) = 0\ \text{V}$)
3. Calculate the maximum value of R_B when $V_{IN} = 5\ \text{V}$ with the saturated transistor.

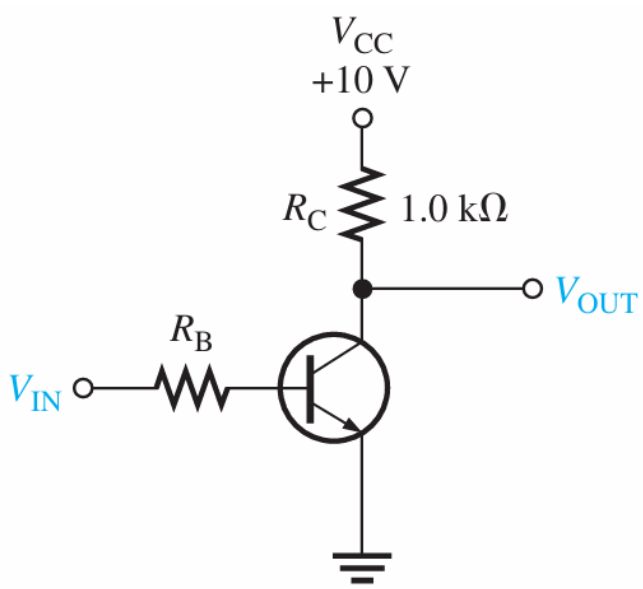

1) $V_{CE} = V_{CC} = 10\,V$

2) $$I_{C(\text{sat})} = \frac{V_{CC} - V_{CE(\text{sat})}}{R_C} = \frac{10-0}{1k} = 10\ \text{mA}$$

$$I_{B(\text{min})} = \frac{I_{C(\text{sat})}}{\beta_{DC}} = \frac{10\ \text{m}}{200} = 50\ \mu\text{A}$$

3) $$R_{B(\text{max})} = \frac{V_{IN} - V_{BE}}{I_{B(\text{min})}} = \frac{5-0.7}{50\mu} = 86\ \text{k}\Omega$$

LED SWITCHING BY BJT

- A *square wave 方波 input voltage* with a *period of 2 s* is applied to the input.
- When the square wave is at 0 V (*cutoff 截止*), $I_C = 0$, the LED does *NOT emit light*.
- When the square wave goes to its *high level*, the transistor *saturates 飽和*, resulting I_C through the *LED causes it to emit light*.
- Thus, the LED is on for 1 second and off for 1 second.

Question:
Why do not directly connect the square wave to the load (LED)?

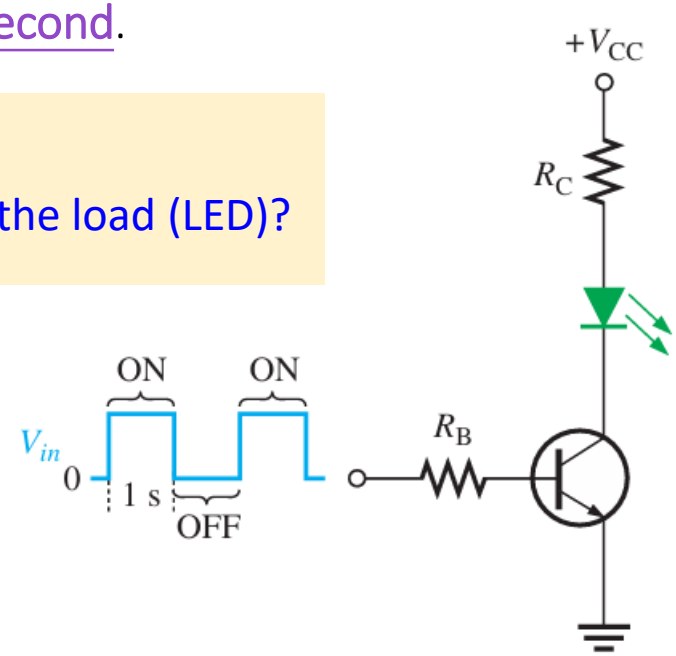

PHOTOTRANSISTOR

- A ***phototransistor 光電電晶體*** is similar to a regular BJT except that the I_B is ***produced and controlled by light*** instead of a voltage source.
- The phototransistor effectively converts light energy to an electrical signal.

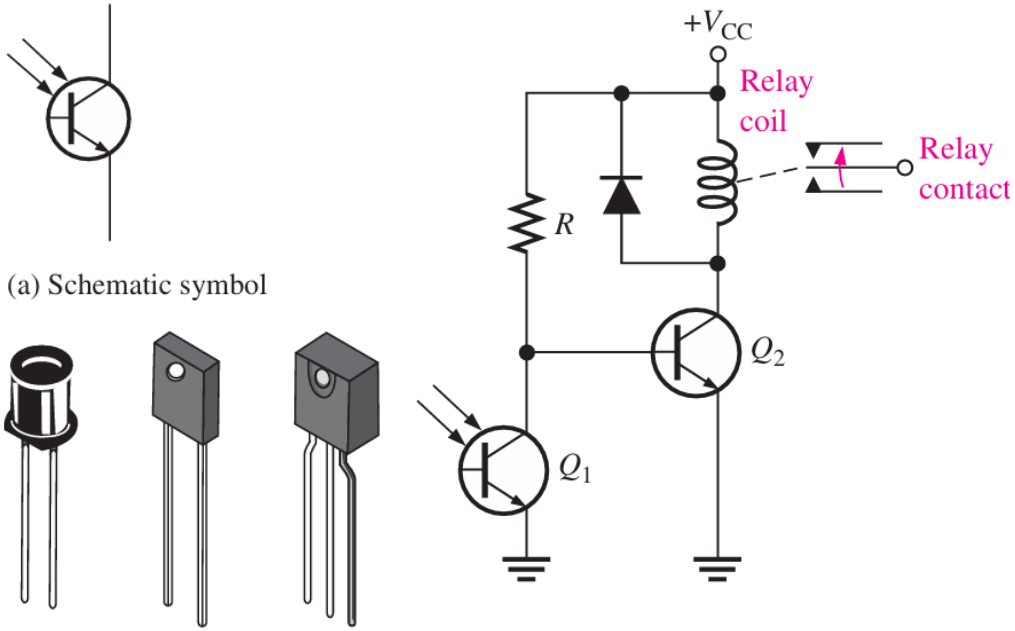

(a) Schematic symbol

(b) Typical packages
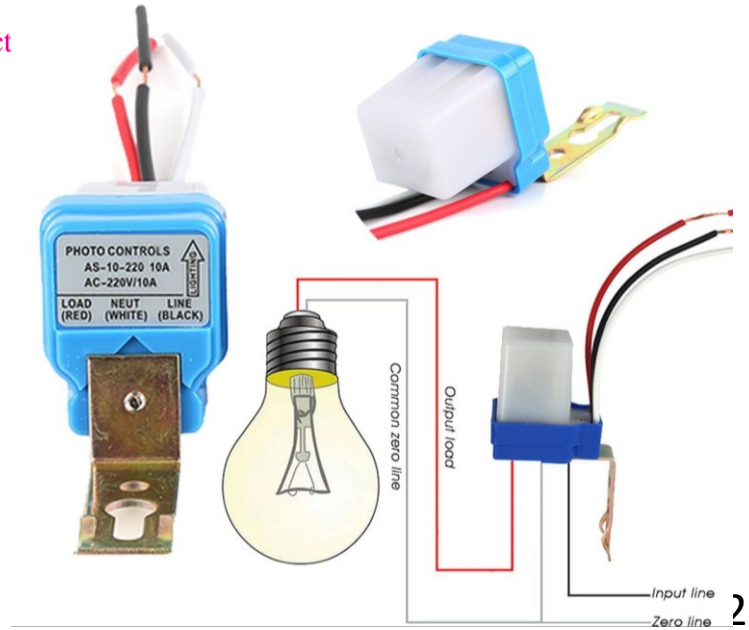
Day-time: Turn OFF light
Night-time: Turn ON light