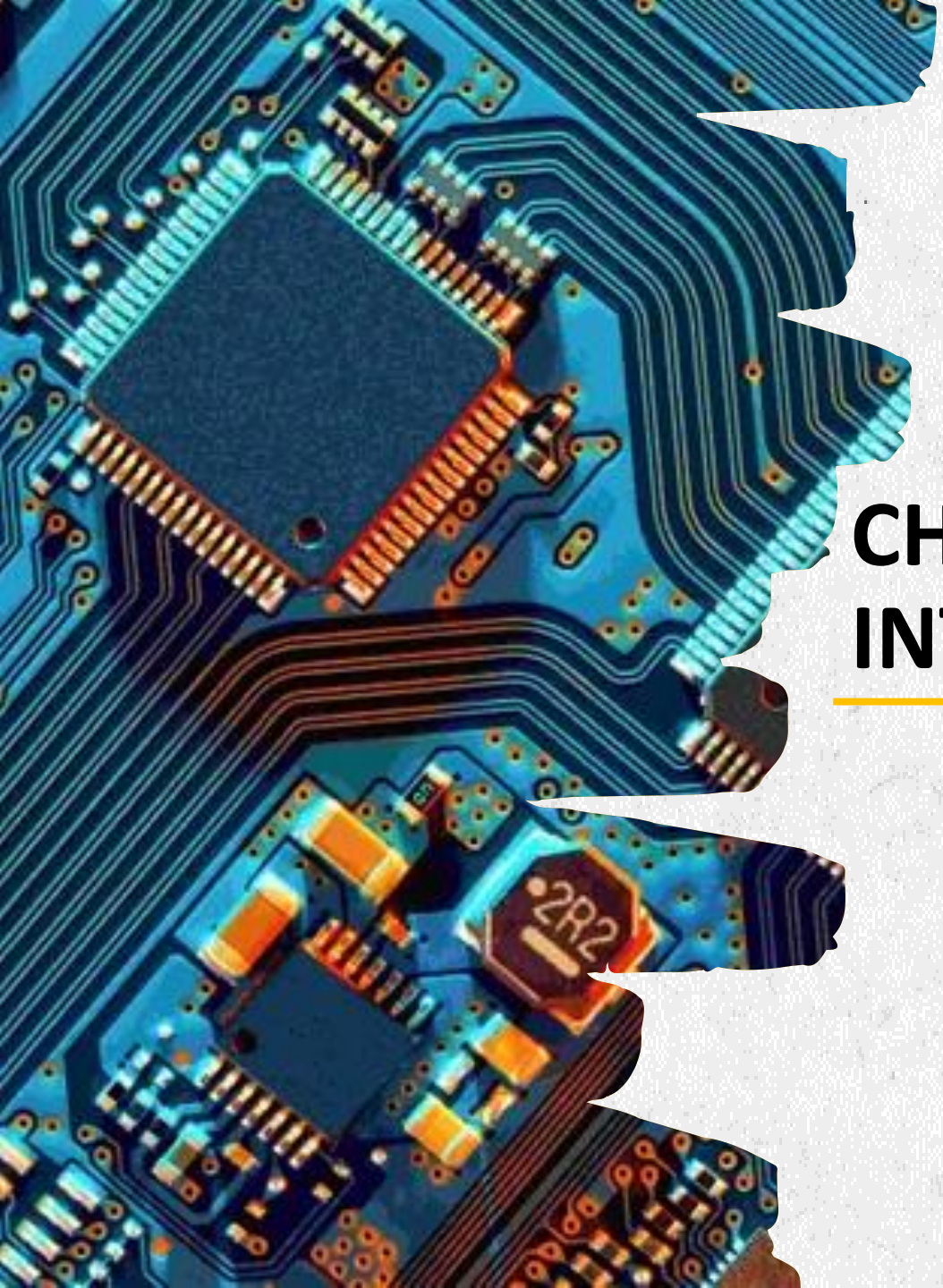

CHAPTER 1
INTRODUCTION

INSTRUCTOR

- **課程名稱**： 應用電子學（一）、MTU0075
- **授課教師**：
  - Woraphrut Kornmaneesang (辜漢文)
  - Email: woraphrut.korn@ntnu.edu.tw
- **教室**：綜 210
- **上課時間**：星期一、09:10 ~ 12:10
- **教師辦公室**： TC 210
- Office hours：週三早上10~12點 與 週四上午2~4點
- **教材**： NTNU-Moodle
- **語言**：中文講述、英文教材

INTRODUCTION

- This is a course "Applied Electronics (應用電子學)", which provides a comprehensive knowledge of semiconductor-based electronic devices (半導體元件), including (1) diodes (二極體), (2) transistors (晶体管), and (3) Op-Amp (運算放大器), and introduces their applications.

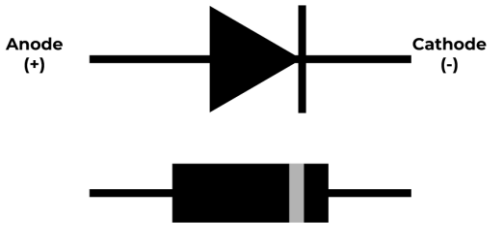

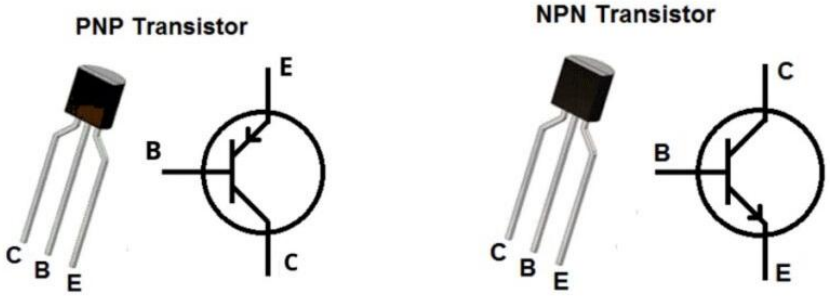

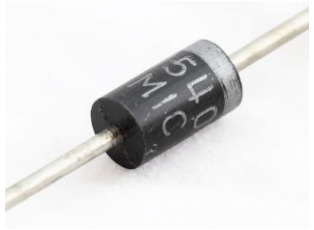

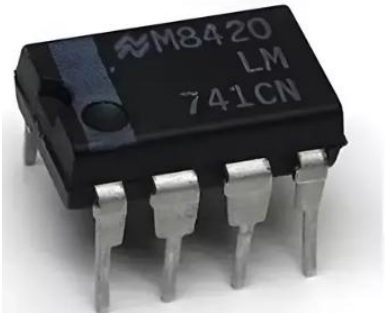

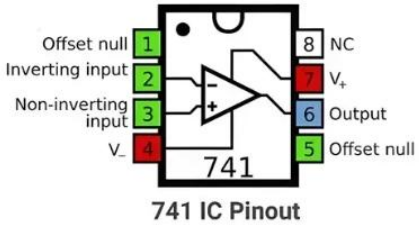

INTRODUCTION

- After learning the theoretical part (理論) of electronic devices in 應用電子學, another course (應用電子學實驗) will bring you to validate (驗證) the theory (理論) through Simulation (模擬) and Experiments (實驗).

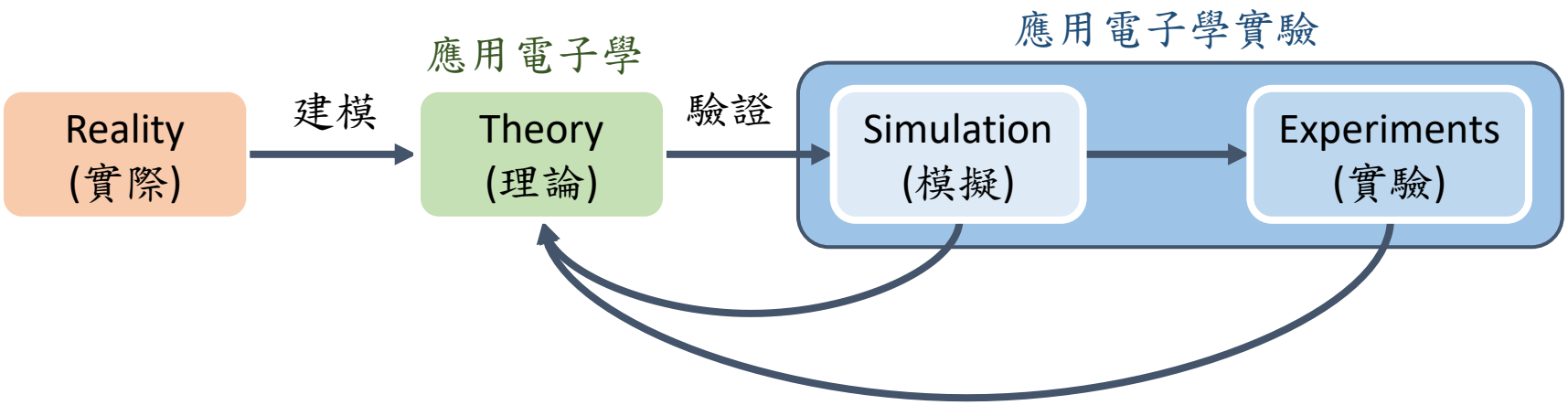

SYLLABUS & GRADING

Week	Date	Topic
1	2/23	Introduction
2	3/2	Semiconductors and electronics
3	3/9	Diodes and applications
4	3/16	Bipolar junction transistors (BJTs)
5	3/23	BJT amplifiers
6	3/30	Field-effect transistors (FETs) and switching circuits
7	4/6	Children's Day/Tomb Sweeping Day (No classes)
8	**4/13**	**Midterm exam**
9	4/20	Operational amplifier (Op-Amp)
10	4/27	Basic Op-Amp circuits
11	5/4	Basic Op-Amp circuits
12	5/11	Special purpose Op-Amp circuits
13	5/18	Frequency response
14	5/25	Active filters
15	6/1	Oscillators
16	**6/8**	**Final exam**

Grading

- Attendance 10%
- Quiz 20%
- Midterm exam 35%
- Final exam 35%

點名

- 遲到沒有 10 分鐘 → 正常
- 遲到超過 10 分鐘 → 遲到
- 遲到超過 20 分鐘 → 蹺課

TEXTBOOKS

- Main texts
  - Thomas L. Floyd, ***Electronic Devices: Conventional Current Version***, 10/e, Pearson Education, 2018.
  - Adel S. Sedra, Kenneth C. Smith, ***Microelectronic Circuits***, 7/e, Oxford University Press, 2015

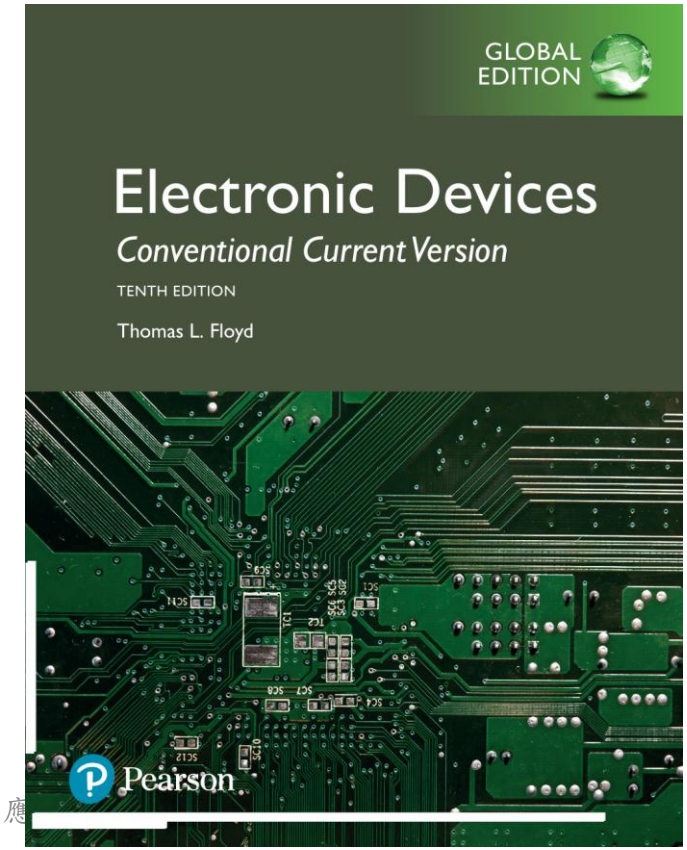

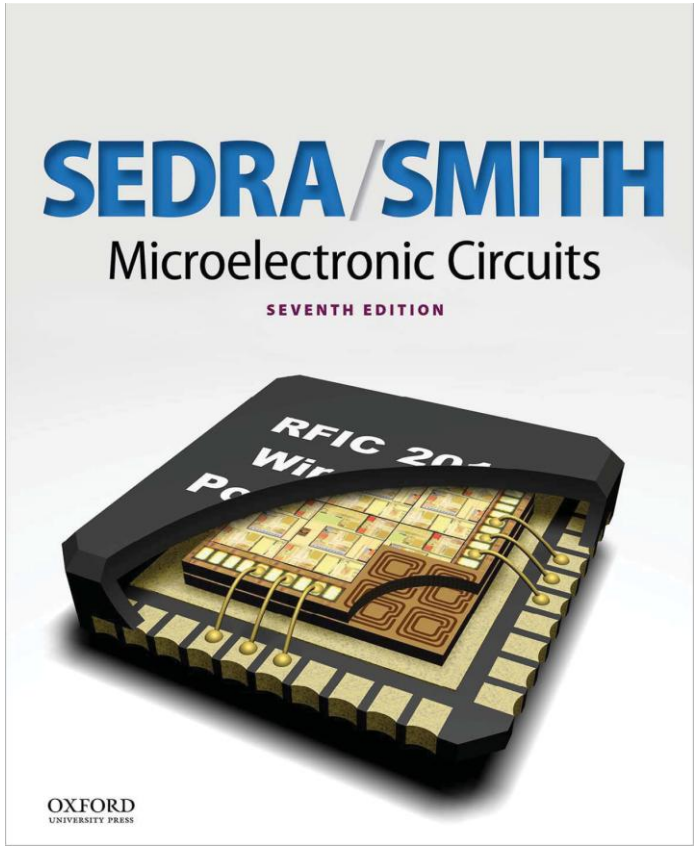

課本(中文版)

- Thomas L. Floyd、電子學(基礎理論、進階應用)、2019年。
- Adel A. Sedra, et.al、微電子學(上下冊)、2022~2023 年。

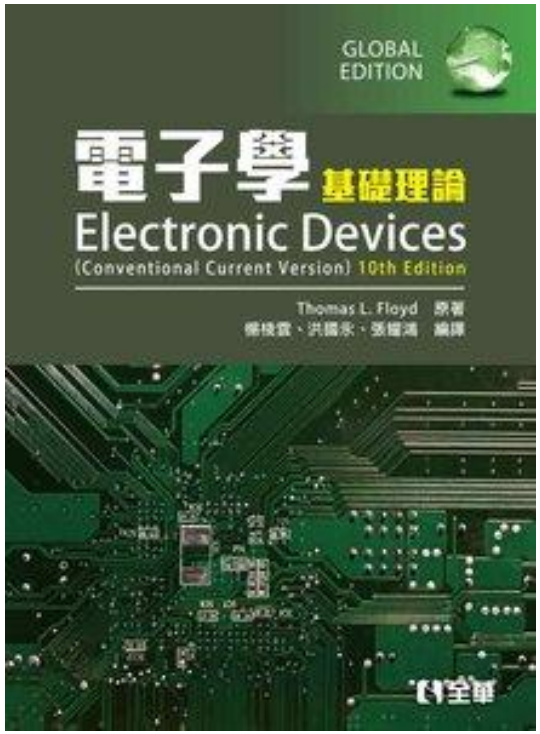

PASSIVE VS ACTIVE ELECTRONIC DEVICES

- Have you heard about "passive (被動元件)" and "active (主動元件)" components?
  - Active components (主動元件) – *require an external power source* to activate their functions.
  - Passive components (被動元件) – perform their function with *no external power* source needed.

- All components that you have learned from 電路學 are passive!
- Meanwhile, this course (應用電子學) will bring you to explore active components (主動元件), e.g., diodes, LEDs, transistors, and Op-Amp, and their applications.

電路學

應用電子學

PASSIVE			ACTIVE		
Resistor			Transistor		
LDR		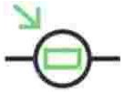	Diode		
Thermistor			LED		
Capacitor			Photodiode		
Inductor			Integrated Circuit		-
Switch		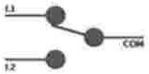	Operational Amplifier		
Variable Resistor			Seven Segment Display		
Transformer			Battery		

APPLICATIONS

- Integration of these devices, you can establish a lot of electronic applications:

➢ AC-DC Converter (整流器) or DC Power supply (直流電源供應器)

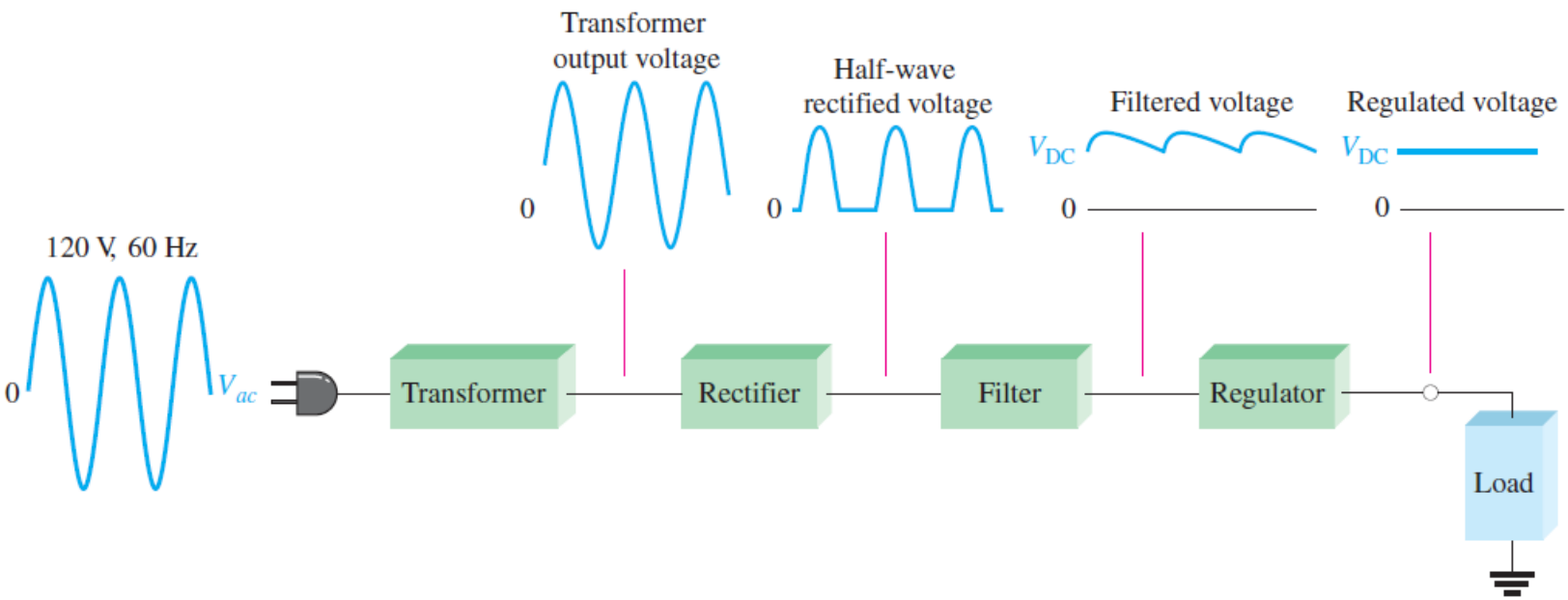

APPLICATIONS

- Integration of these devices, you can establish a lot of electronic applications:

➢ DC-AC Inverter (逆變器)

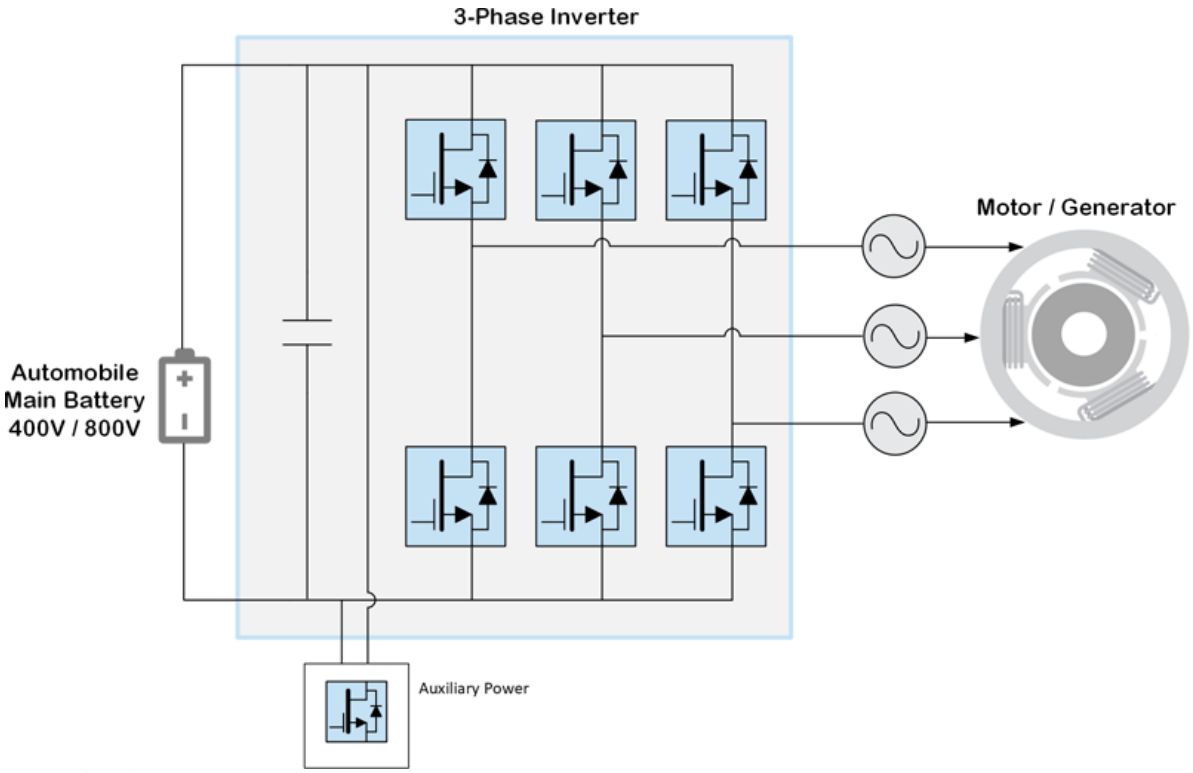

APPLICATIONS

- Integration of these devices, you can establish a lot of electronic applications:

➢ Oscillator (振盪器)

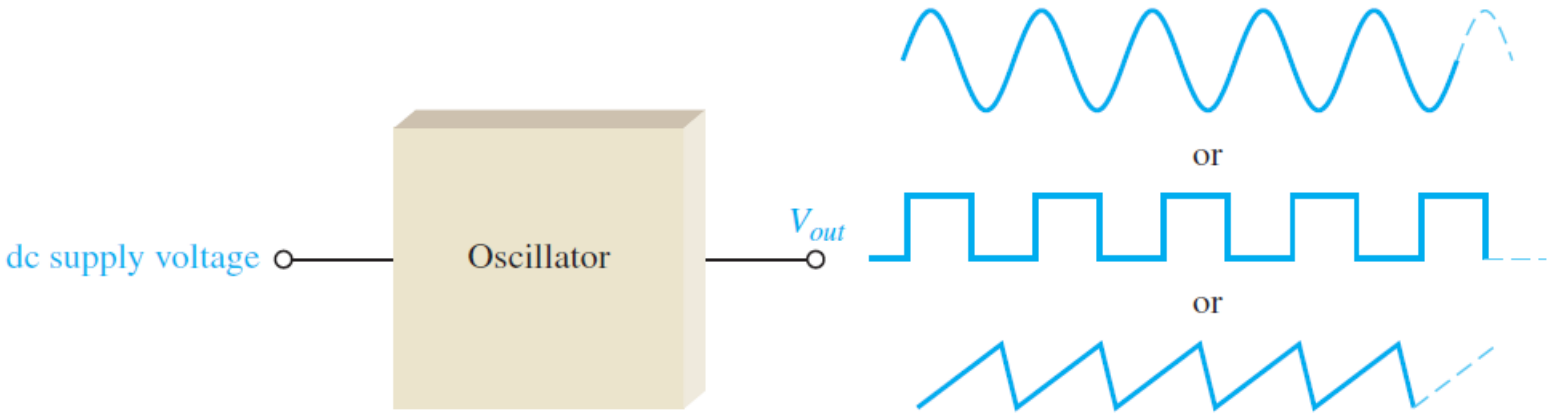

APPLICATIONS

- Integration of these devices, you can establish a lot of electronic applications:

➢ Noise filtering (雜訊濾波器)

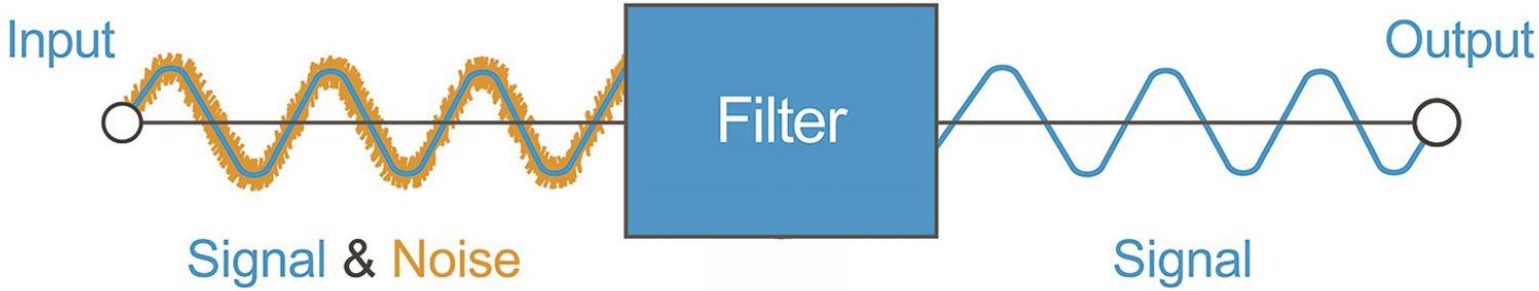

APPLICATIONS

- Integration of these devices, you can establish a lot of electronic applications:

➢ Temperature to Voltage conversion for maintaining temperature

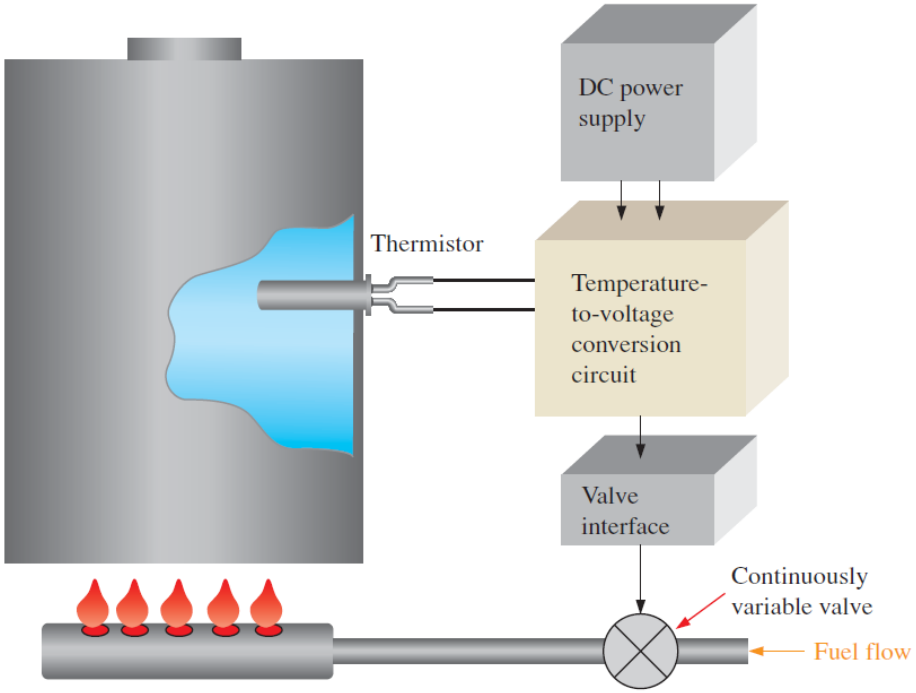

RECALL & REVIEW

- 電路學 focuses on Resistors (電阻), Capacitors (電容), and Inductors(電感器), and their circuit analysis (電路分析)：
  - Ohm's laws 歐姆定律
  - Kirchhoff's voltage law (KVL) 克希荷夫電壓定律
  - Kirchhoff's current law (KCL) 克希荷夫電流定律

Ohm's Law

$$V = IR$$

$$i_c = C\frac{dv_c}{dt}$$

$$v_L = L\frac{di}{dt}$$

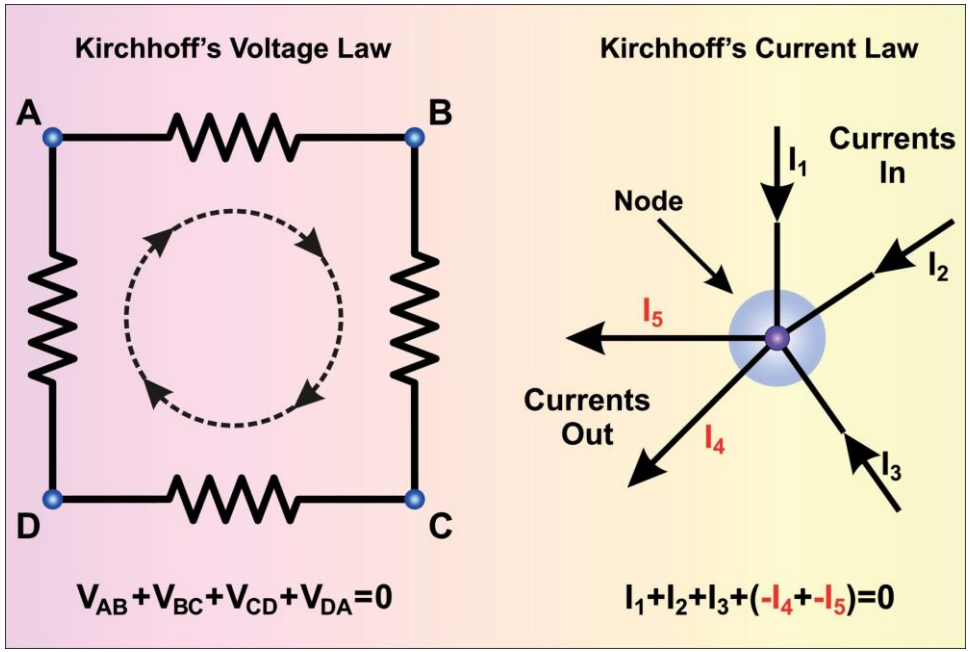

SYLLABUS & GRADING

Week	Date	Topic
1	2/23	Introduction
2	3/2	Semiconductors and electronics
3	3/9	Diodes and applications
4	3/16	Bipolar junction transistors (BJTs)
5	3/23	BJT amplifiers
6	3/30	Field-effect transistors (FETs) and switching circuits
7	4/6	Children's Day/Tomb Sweeping Day (No classes)
8	**4/13**	**Midterm exam**
9	4/20	Operational amplifier (Op-Amp)
10	4/27	Basic Op-Amp circuits
11	5/4	Basic Op-Amp circuits
12	5/11	Special purpose Op-Amp circuits
13	5/18	Frequency response
14	5/25	Active filters
15	6/1	Oscillators
16	**6/8**	**Final exam**

Grading

- Attendance 10%
- Quiz 20%
- Midterm exam 35%
- Final exam 35%

BETTER TO KNOW

- *Quiz* every 2 weeks (uncertain)
- If you have questions during class
  - Ask immediately
  - Ask during a break
  - Ask after the class
  - Ask when we meet up anywhere
- DO NOT email me for extra score!

➢ Today, the class is over. See you next week.

➢ To those who need 授權碼, please come to find me.