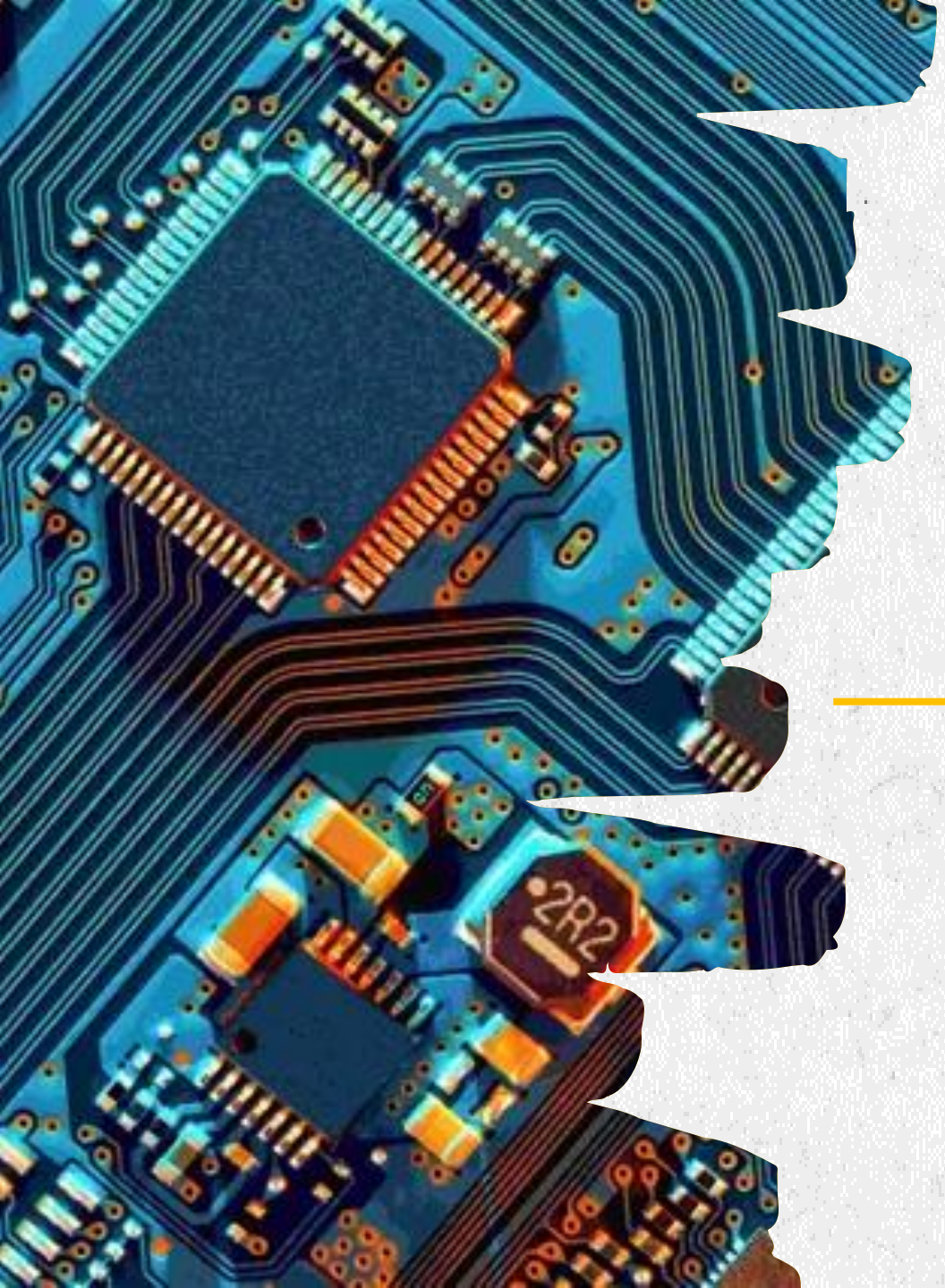

CHAPTER 3
DIODES

DIODES

- A *diode 二極體* is made from a small piece of semiconductor material, usually *silicon 矽*, in which *half is doped as a p region* and *half is doped as an n region* with a *pn* junction (pn接面) and depletion region 空乏層 in between.
- The *p region* is called the anode 陽極 and is connected to a conductive terminal.
- The *n region* is called the cathode 陰極 and is connected to a second conductive terminal.

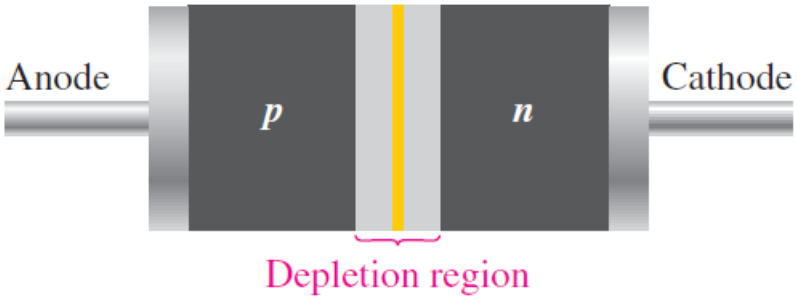

(a) Basic structure

(b) Symbol

DIODE PACKAGES

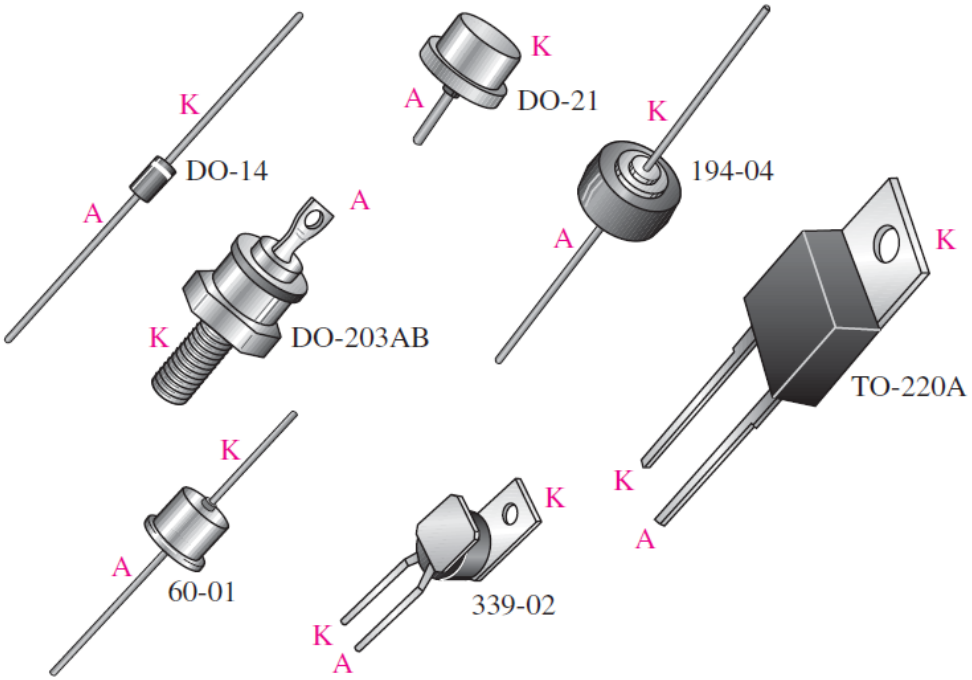

Through-hole

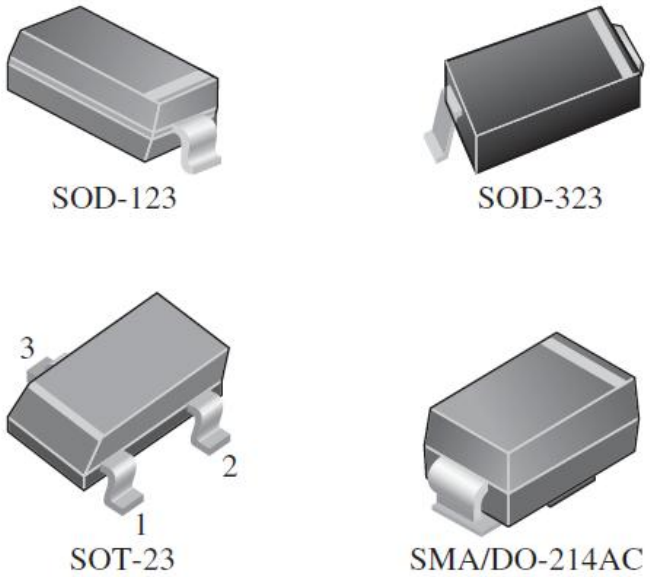

Surface mount

FORWARD BIAS

- To bias a diode, you apply a dc voltage across it.
- *Forward bias 順向偏壓* is the condition that allows current through the *pn* junction.
- This external bias voltage is designated as V_{BIAS}.

To limit the current
(not to damage diode)

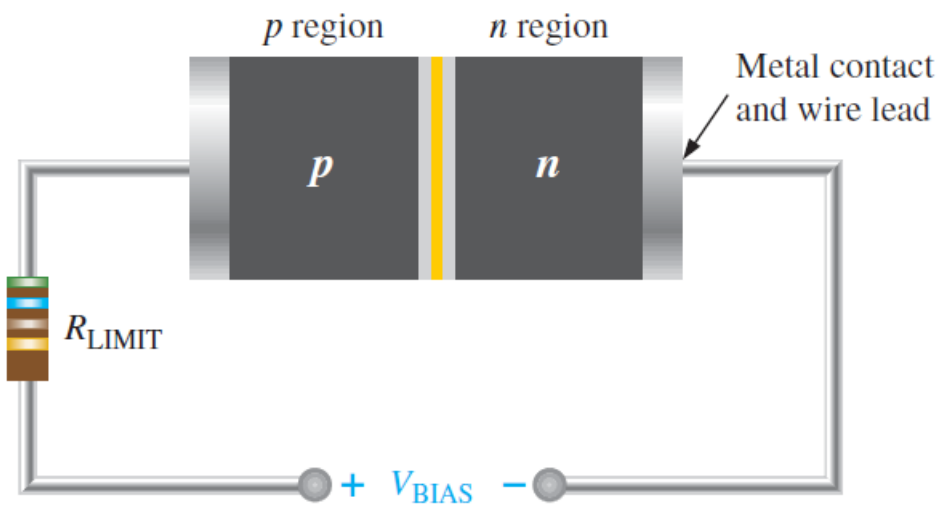

(V_{BIAS} > Barrier potential)

FORWARD BIAS

- *Forward bias 順向偏壓* narrows the depletion region and produces a voltage drop across the *pn* junction equal to the barrier potential.

No bias (no voltage applied)

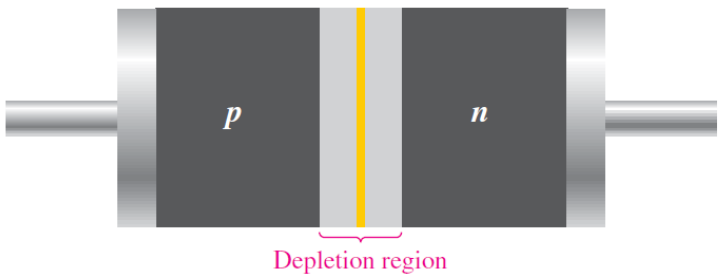

Forward bias

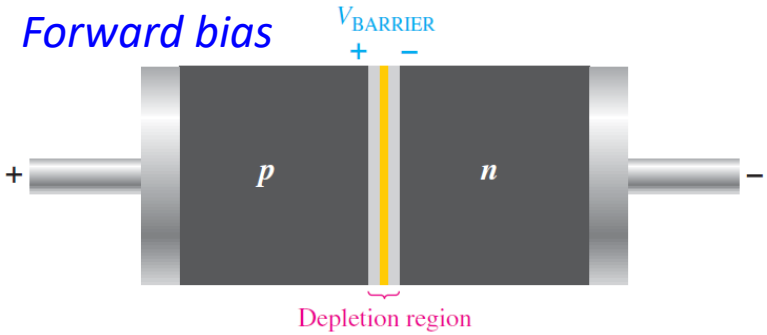

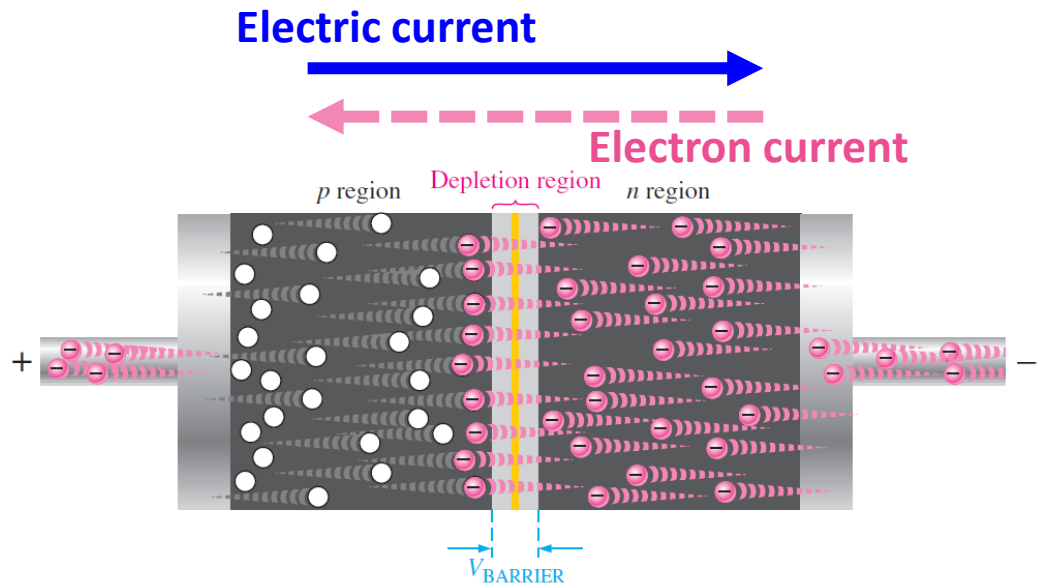

$(V_{BIAS} > V_{BARRIER})$

Barrier potential ($V_{BARRIER}$) is typically 0.7 V for silicon and 0.3 V germanium.

REVERSE BIAS

- *Reverse bias 逆向偏壓* is the condition that prevents current through the diode.
- This external bias voltage is designated as V_{BIAS}.

No bias (no voltage applied)

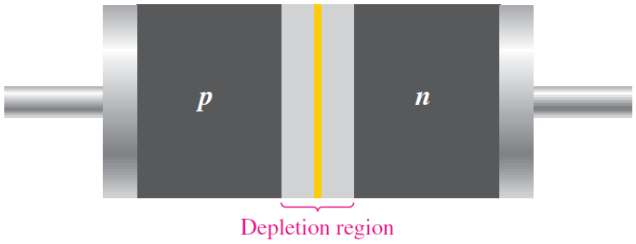

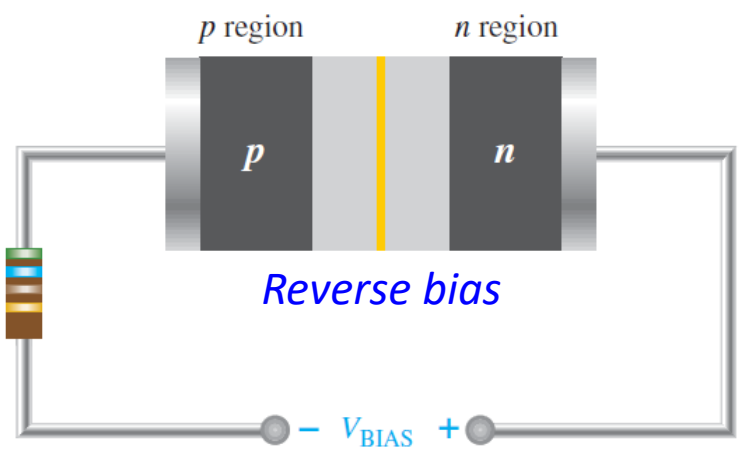

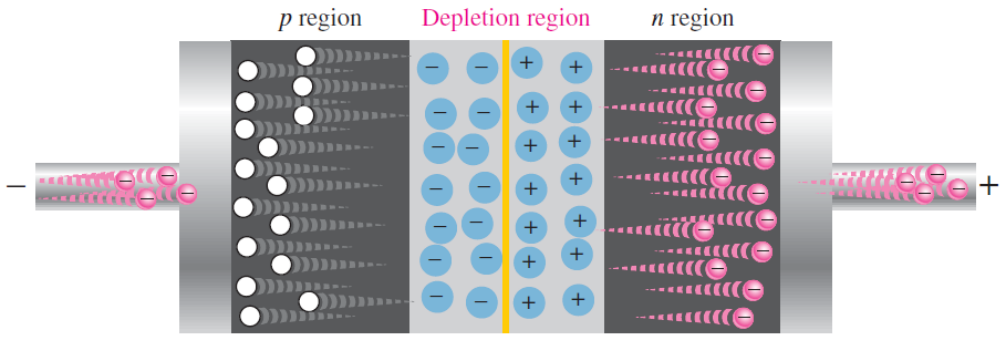

- Electrons in n region are pulled to V_{BIAS}+.
- Electrons of V_{BIAS}− fill holes in p region.
- Depletion gets wider.
- Current may leak extremely small.

V-I CHARACTERISTIC FOR FORWARD BIAS

- When a ***forward-bias voltage*** V_F is applied across a diode, there is current.
- This current is called the ***forward current*** I_F.

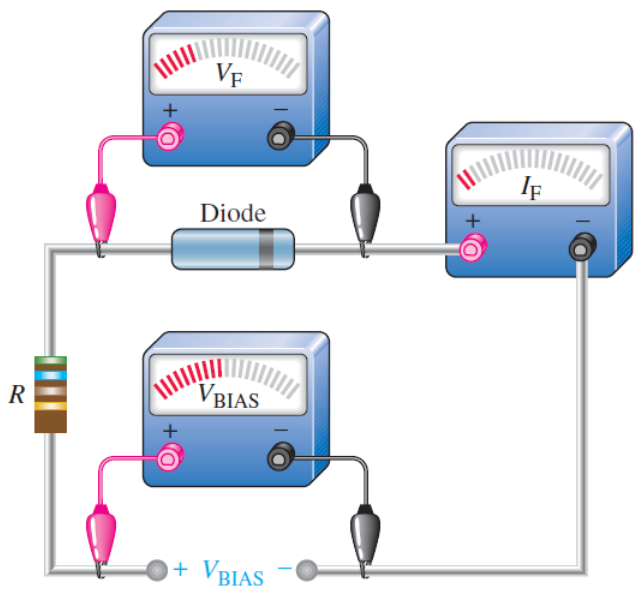

Small forward-bias voltage ($V_F < 0.7\ V$), very small forward current

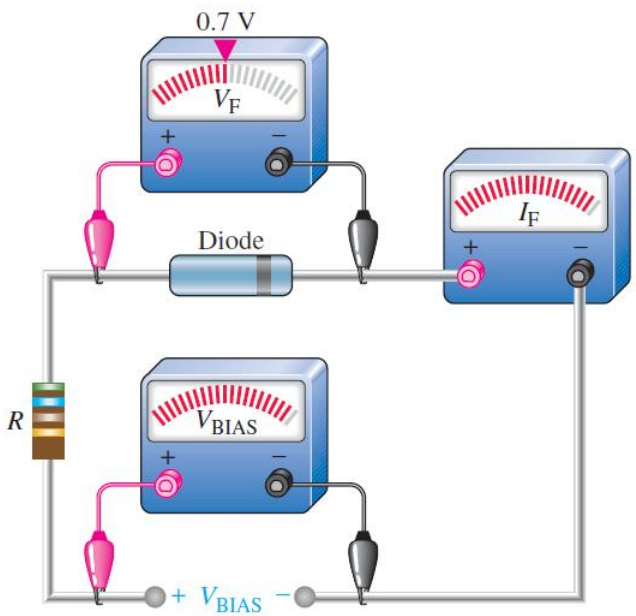

Forward voltage reaches and remains at $0.7\ V$.
Forward current increases as the bias voltage is increased.

V-I CHARACTERISTIC FOR FORWARD BIAS

- If you gradually increase V_{BIAS}, and measure forward voltage V_F and current I_F, you can get the voltage-current ($V-I$) characteristic curve (電流-電壓特性曲線).

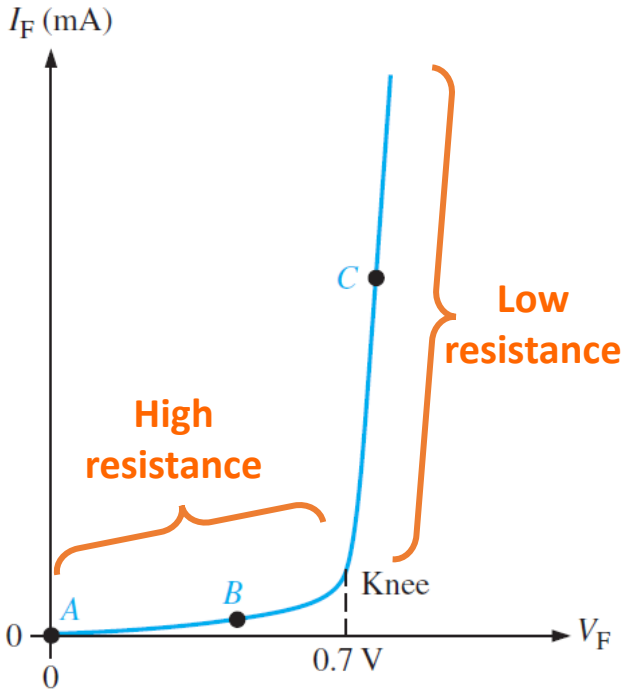

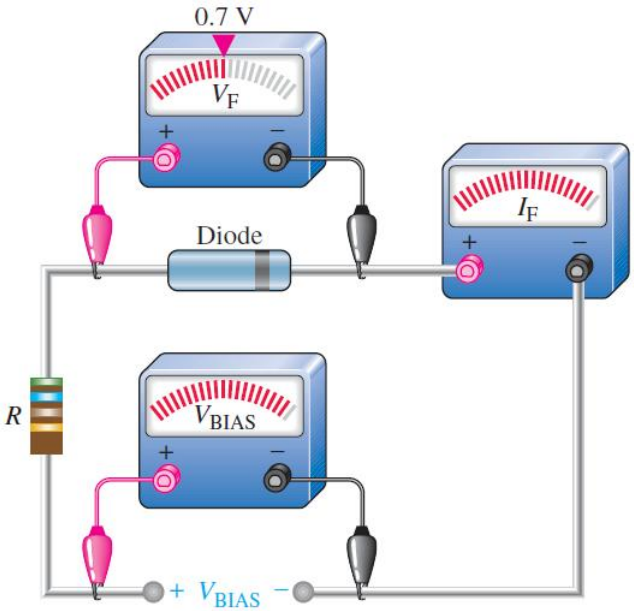

V-I CHARACTERISTIC FOR REVERSE BIAS

- When a reverse-bias voltage (V_R) is applied across a diode, there is only an extremely small reverse current (I_R) through the *pn* junction.
- As you gradually increase the reverse-bias voltage, there is a very small reverse current and the voltage across the diode increases.
- When the applied bias voltage is increased to a value where the reverse voltage (V_R) across the diode reaches the ***breakdown voltage*** (V_{BR} 崩潰電壓), the reverse current begins to increase rapidly.

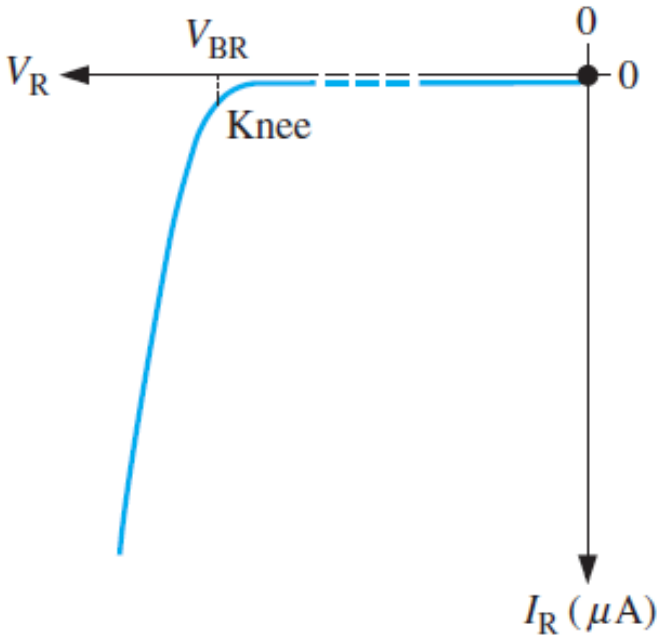

➢ After exceeding the ***breakdown point***, the diode is supposed ***broken***.

V-I CHARACTERISTIC OF A DIODE

- Combine the curves for both forward bias and reverse bias, and you have the *complete V-I characteristic curve* for a diode.

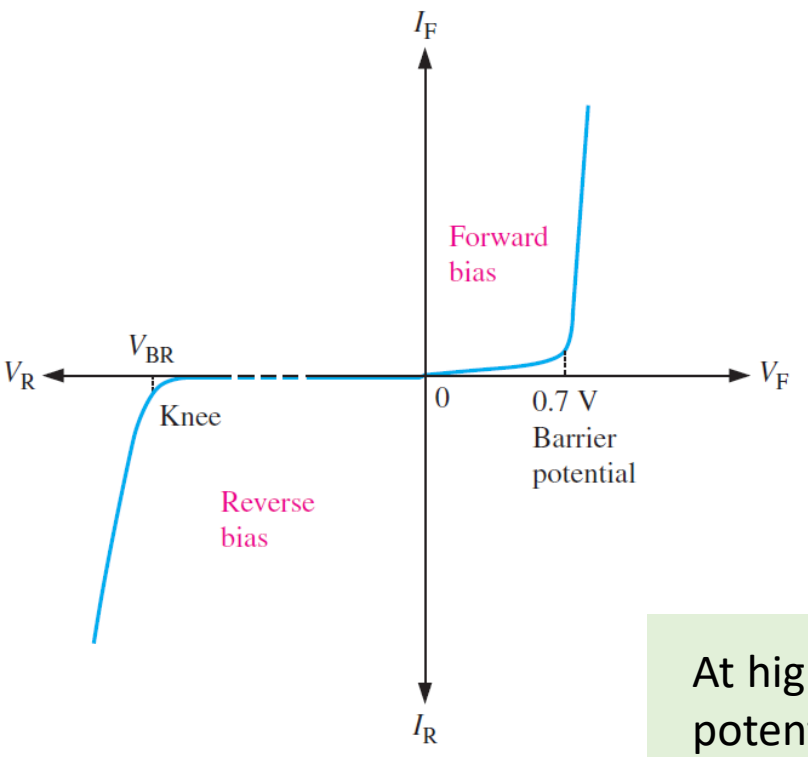

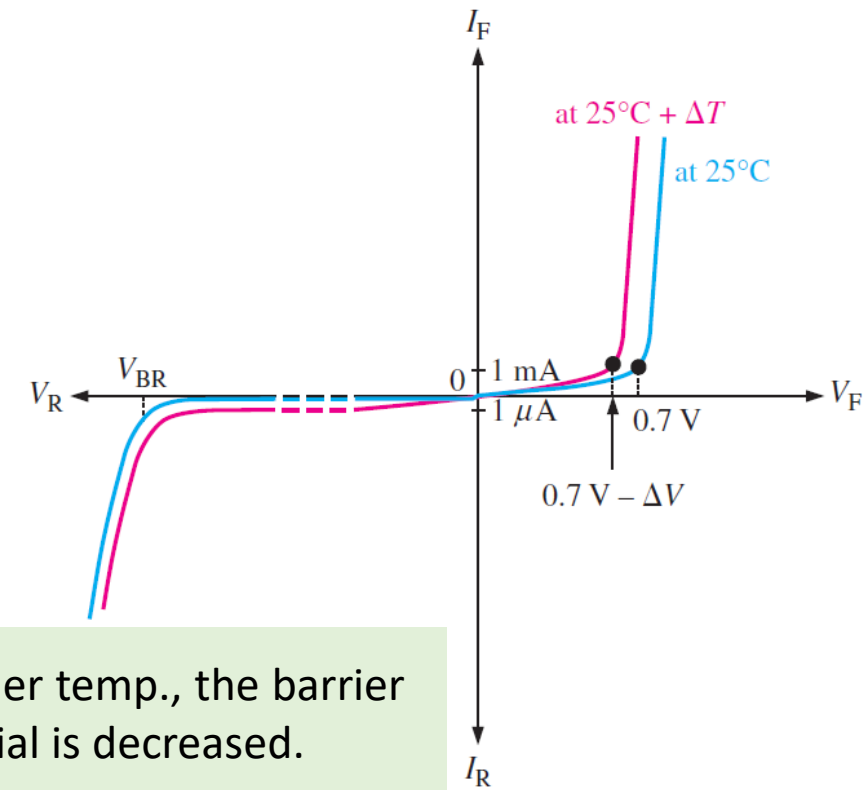

At higher temp., the barrier potential is decreased.

DIODE MODELS

- Just now, we discussed the V-I characteristic of a diode.
- For circuit analysis with diodes, we need a ***model (模型)*** to ***approximate the characteristic of a diode***.
- There are 3 models:
  1. Ideal model
  2. Practical model
  3. Complete model

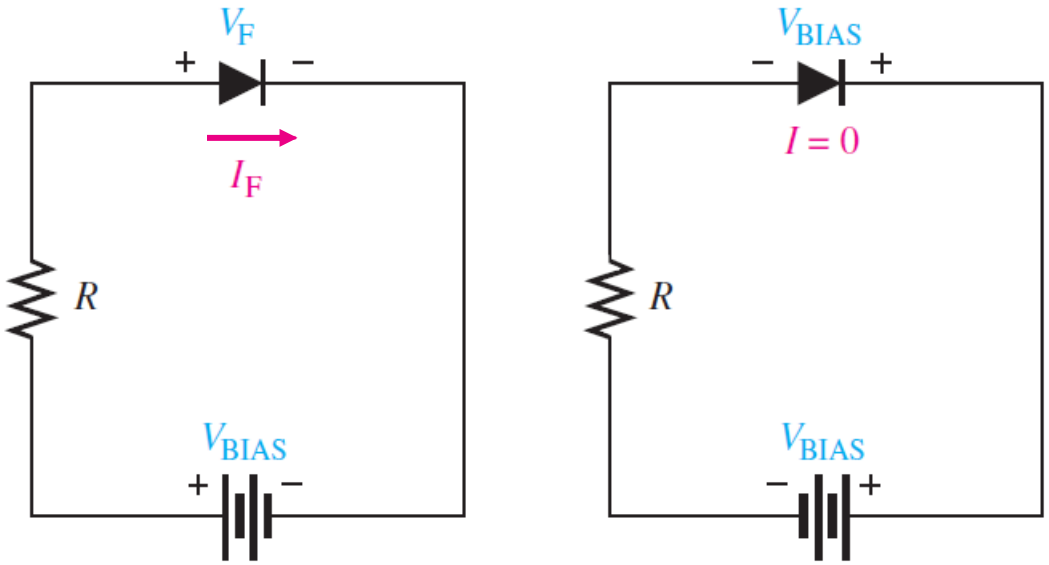

IDEAL MODEL

- The *ideal model* of a diode is the least accurate approximation and can be represented by a *simple switch*.
- When the *diode is forward-biased*, it ideally acts like a *closed (on) switch*.
- When the *diode is reverse-biased*, it ideally acts like an *open (off) switch*.

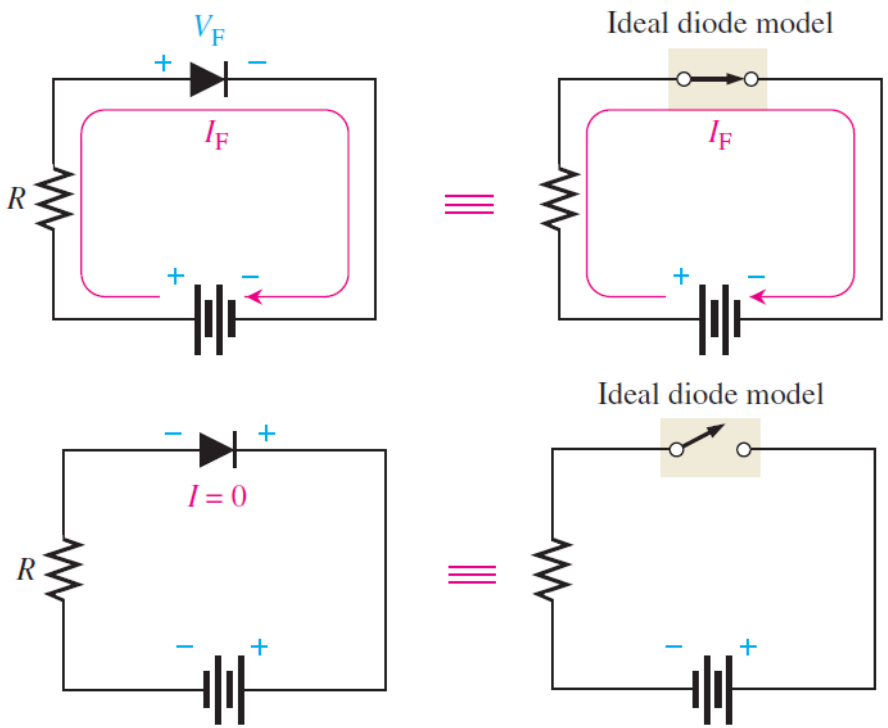

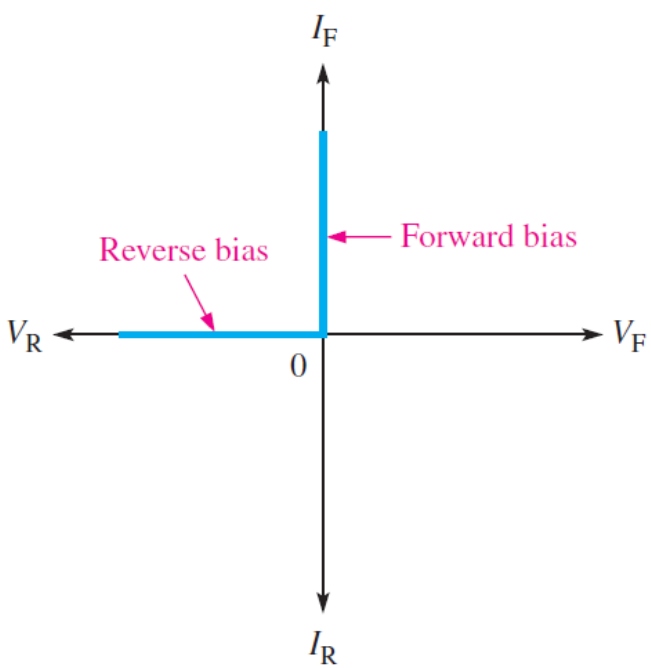

EXAMPLE (1/6)

- Determine the forward voltage V_F and forward current I_F for the diode for each of the diode models. Also find the voltage across the limiting resistor V_R in each case. Assume $r'_d = 10\ \Omega$ at the determined value of forward current.

1. Ideal model

$$V_F = 0 \quad V$$

$$I_F = \frac{V_{BIAS}}{R_{LIMIT}} = \frac{10}{1.0k} = 10 \quad mA$$

$$V_{R_{LIMIT}} = V_{BIAS} - V_F = 10 - 0 = 10 \quad V$$

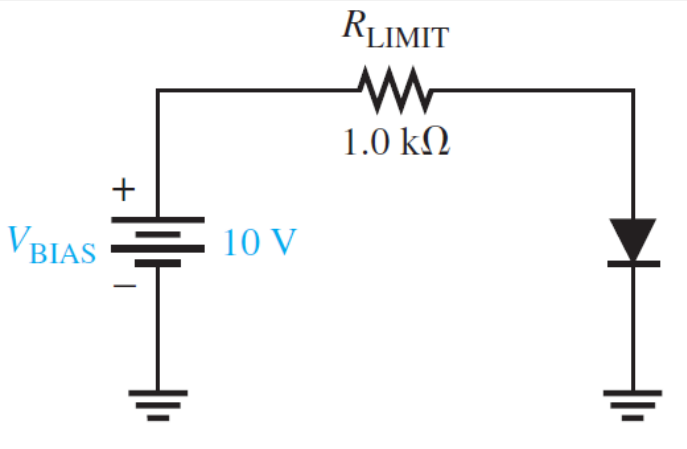

EXAMPLE (2/6)

- Determine the reverse voltage V_R and reverse current I_R for the diode for each of the diode models. Also find the voltage across the limiting resistor V_R in each case. Assume $I_R = 1\ \mu\text{A}$ for the complete model.

1. Ideal model

$$V_R = 10 \quad V$$

$$I_R = 0 \quad A$$

$$V_{R_{LIMIT}} = V_{BIAS} - V_R = 10 - 10 = 0 \quad V$$

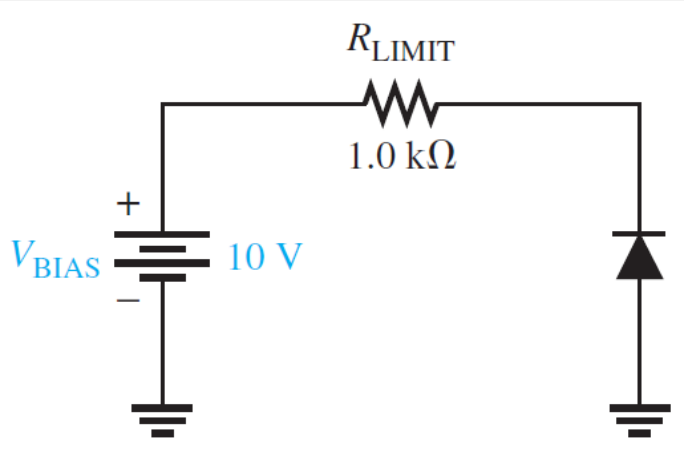

PRACTICAL MODEL

- The ***practical model***, which includes the barrier potential, will be ***used in further analysis***.
- When the diode is ***forward-biased***, it is equivalent to a ***closed switch*** in series with an equivalent ***voltage source*** (V_F) equal to the ***barrier potential*** (0.7 V) with the positive side toward the anode.
- When the ***diode is reverse-biased***, it is an ***open switch*** as in the ideal model

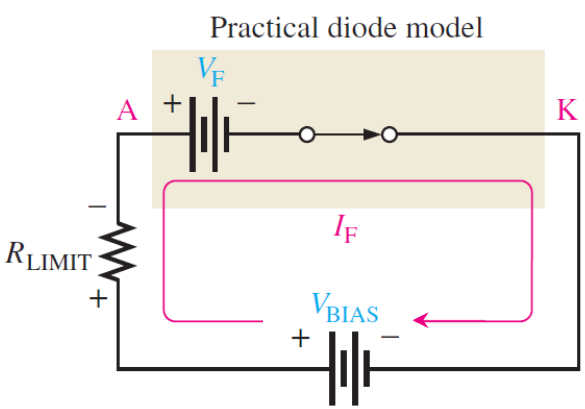

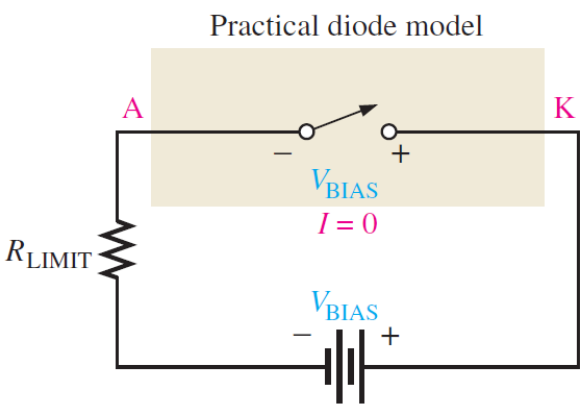

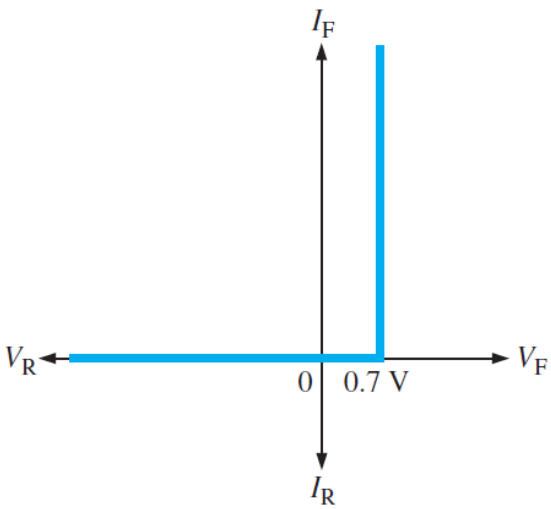

EXAMPLE (2/6)

- Determine the forward voltage V_F and forward current I_F for the diode for each of the diode models. Also find the voltage across the limiting resistor V_R in each case. Assume $r'_d = 10\ \Omega$ at the determined value of forward current.

2. Practical model

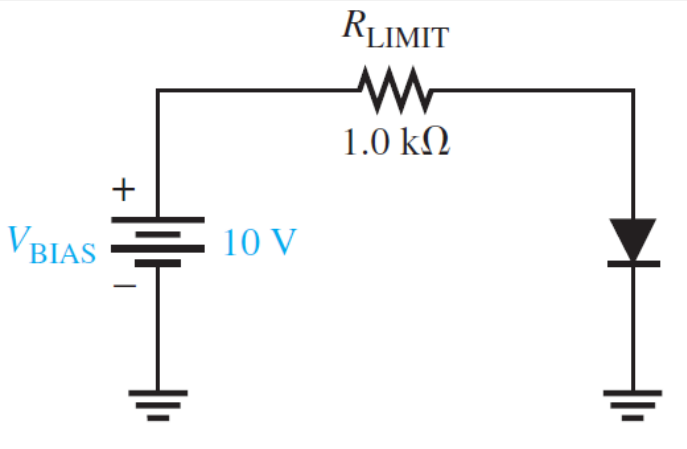

EXAMPLE (5/6)

- Determine the reverse voltage V_R and reverse current I_R for the diode for each of the diode models. Also find the voltage across the limiting resistor V_R in each case. Assume $I_R = 1\ \mu\text{A}$ for the complete model.

2. Practical model

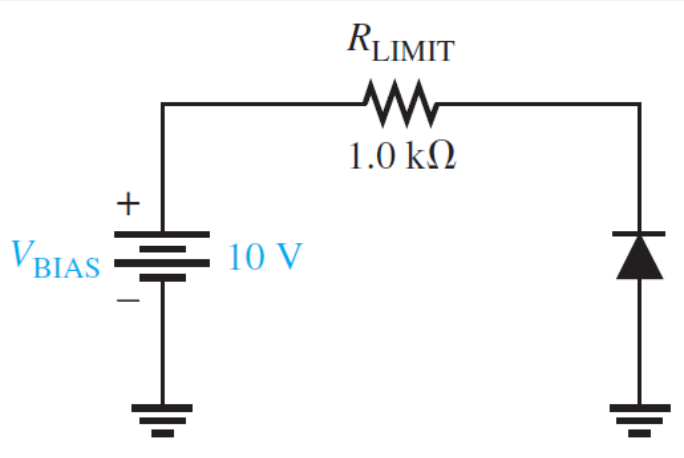

COMPLETE MODEL

- The *complete model* of a diode is the most accurate approximation and includes the *barrier potential*, the *small forward dynamic resistance* (r'_d), and the *large internal reverse resistance* (r'_R).

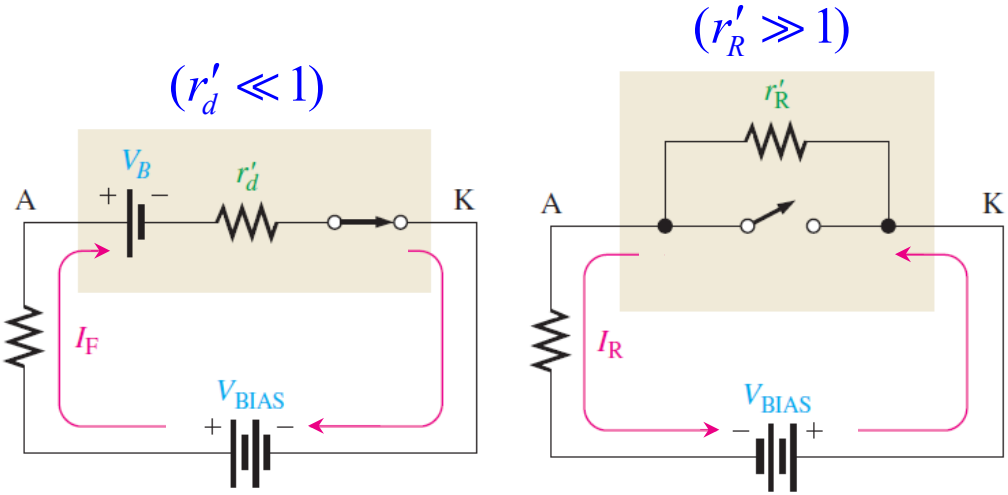

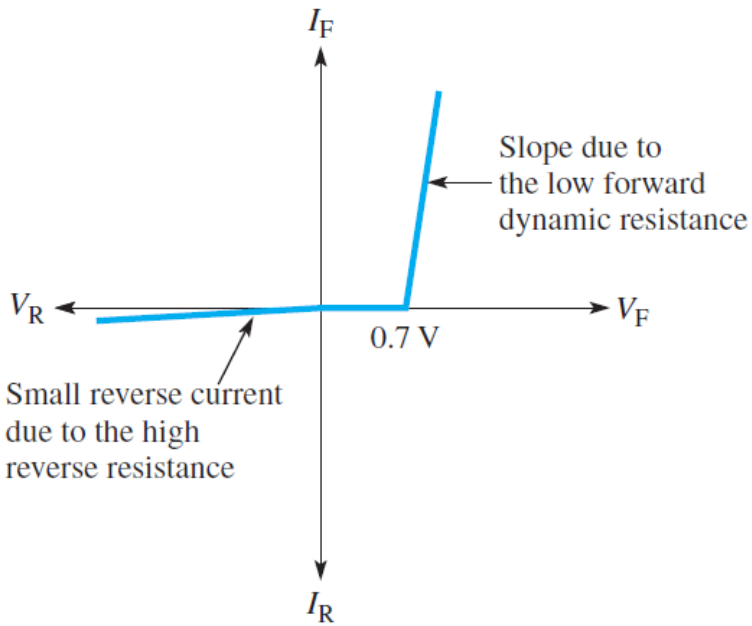

EXAMPLE (3/6)

- Determine the forward voltage V_F and forward current I_F for the diode for each of the diode models. Also find the voltage across the limiting resistor V_R in each case. Assume $r'_d = 10\ \Omega$ at the determined value of forward current.

3. Complete model

$$I_F = \frac{V_{BIAS} - 0.7}{R_{LIMIT} + r'_d} = \frac{9.3}{1010} = 9.21 \quad mA$$

$$V_F = 0.7 + I_F r'_d = 0.7 + (9.21m)(10) = 792 \quad mV$$

$$V_{R_{LIMIT}} = V_{BIAS} - V_F = 10 - 0.792 = 9.21 \quad V$$

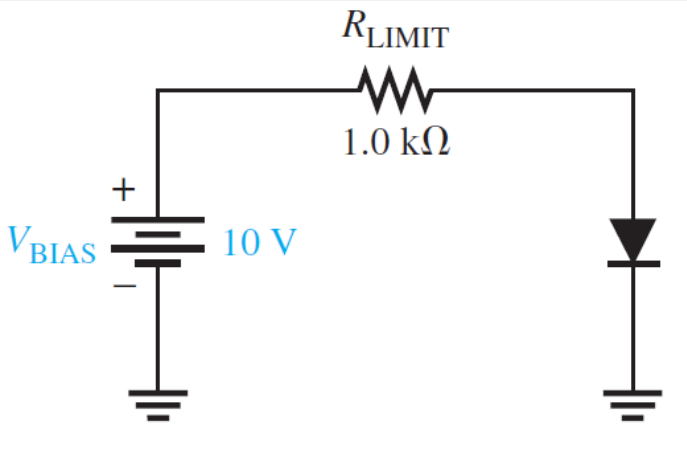

EXAMPLE (6/6)

- Determine the reverse voltage V_R and reverse current I_R for the diode for each of the diode models. Also find the voltage across the limiting resistor V_R in each case. Assume $I_R = 1\ \mu\text{A}$ for the complete model.

3. Complete model

$$I_R = 1 \quad \mu A$$

$$V_{R_{LIMIT}} = I_R R_{LIMIT} = (1\mu)(1k) = 1 \quad mV$$
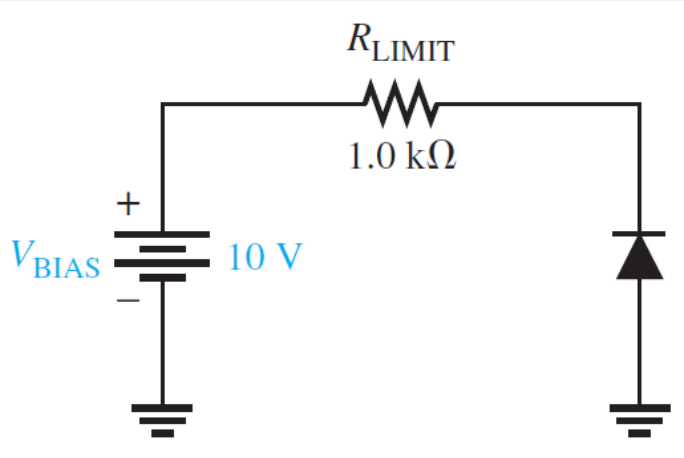
$$V_R = V_{BIAS} - V_{R_{LIMIT}} = 10 - 0.001 = 9.999 \quad V$$