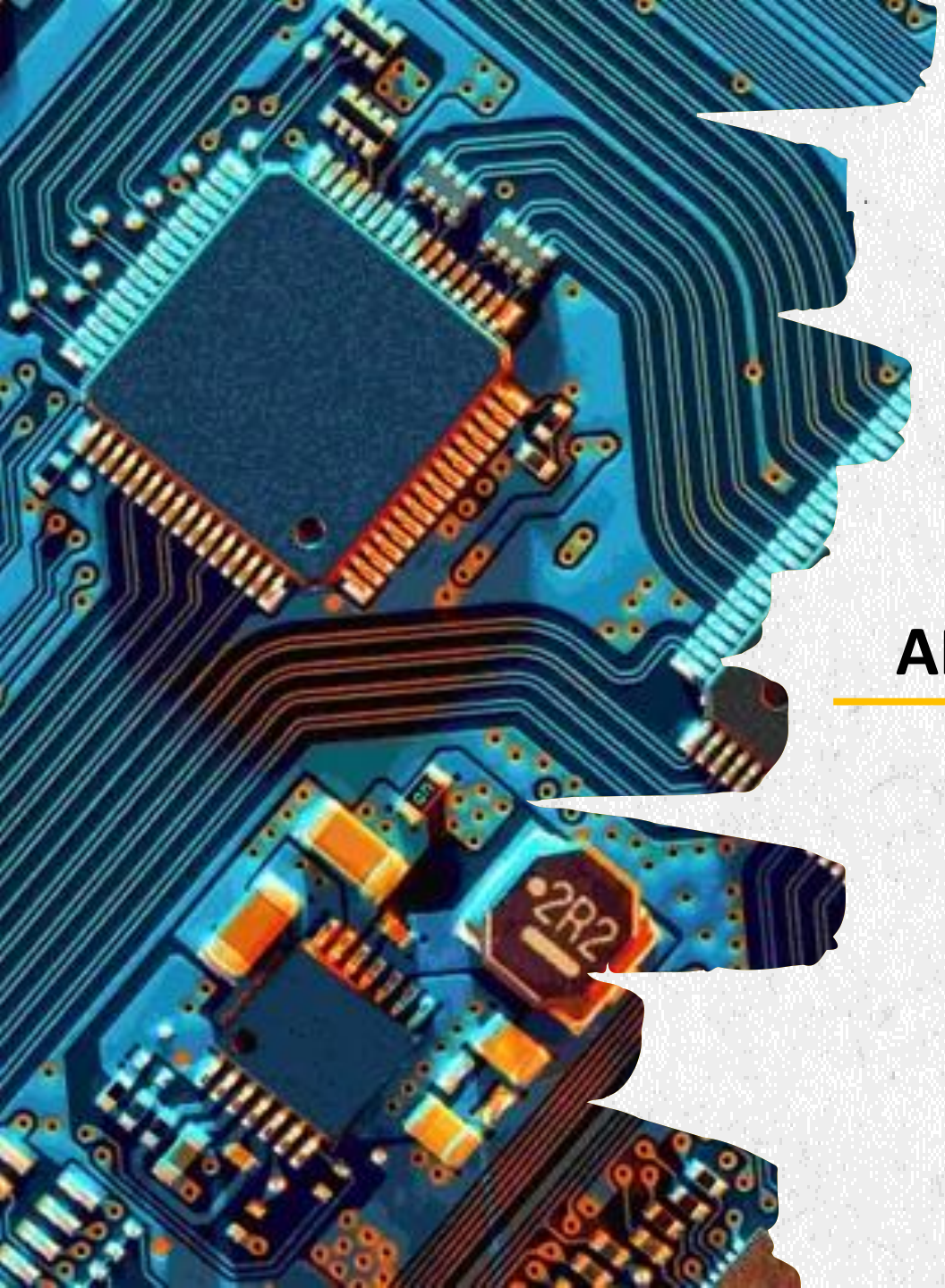

CHAPTER 4

APPLICATIONS OF DIODES

APPLICATIONS OF DIODES

- ***Diodes (二極體)*** are mostly used in DC power supply 直流電源供應器 (or AC/DC converter AC/DC電源轉換器), which converts AC electric signal from an outlet into DC signal, in order *to supply* ***active electronic devices 主動元件***, e.g., phone/laptop chargers, TVs, PCs, speaker, etc.

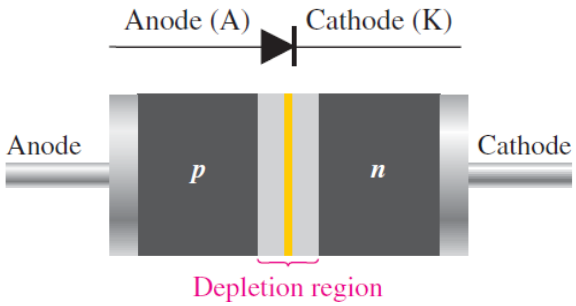

BASIC DC POWER SUPPLY

- A *DC power supply* can be divided in to 4 elements:
  1. **Transformer 變壓器** – to scale up/down the AC signal to a proper magnitude
  2. **Rectifier 整流器** – to convert the AC transformed signal to a pulsating DC signal (half-wave or full-wave rectified signals).
  3. **Filter 濾波器** – to eliminate high-frequency signal, smoothing the DC signal, but still contains ripples 漣波
  4. **Regulator 穩壓器** – to cut off the ripple and to maintain the constant DC signal for variations in the load.

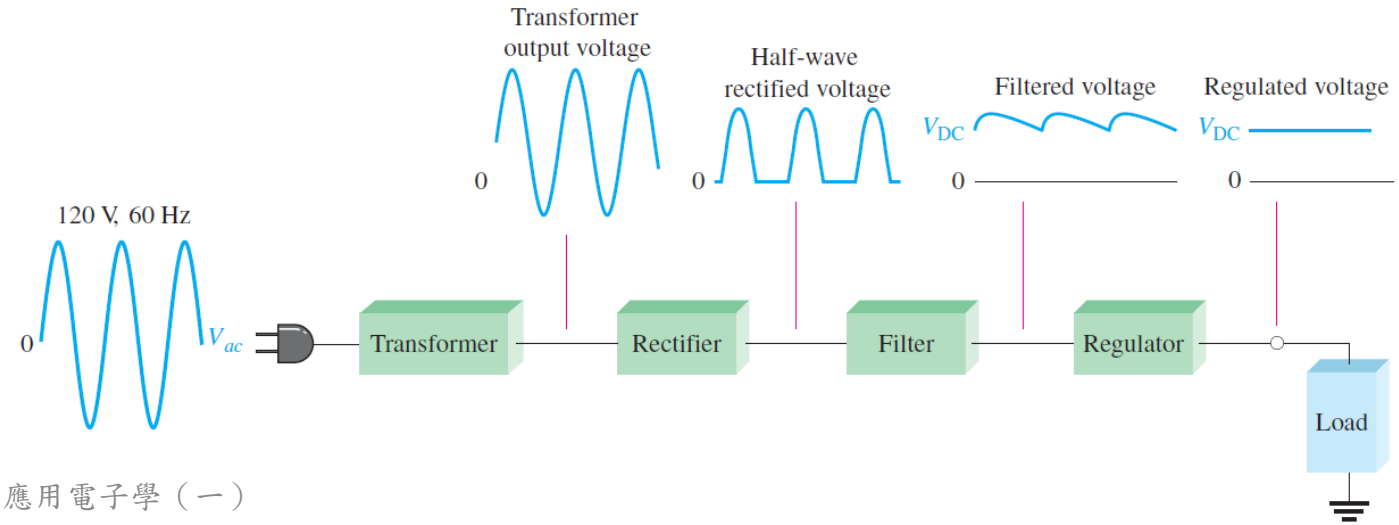

TRANSFORMER

- A *transformer 變壓器* has *a magnetic core 磁芯* *and* *two windings 繞組 (primary and secondary)* that transfers AC power through electromagnetic induction 電磁感應, enabling voltage step-up or step-down, with respect to the turns ratio (匝數比) $n = \frac{N_S}{N_p}$.

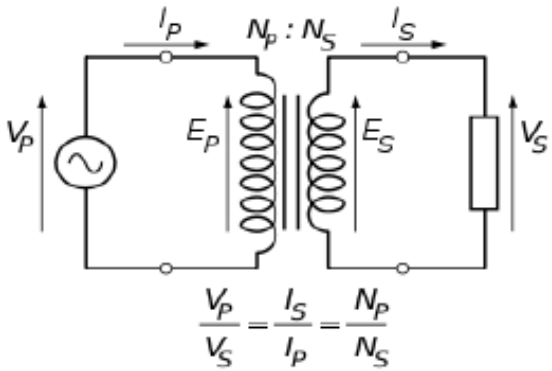

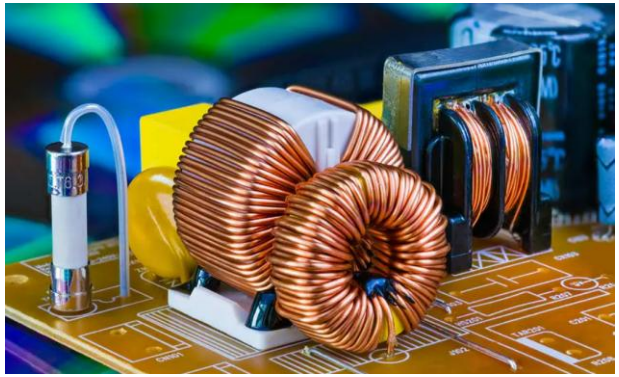

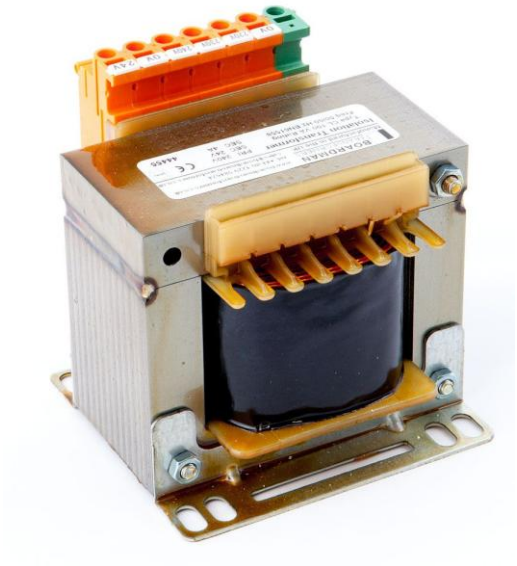

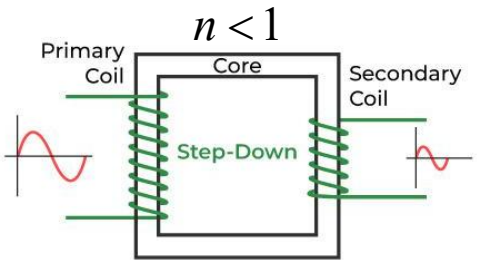

Step-Down Transformer

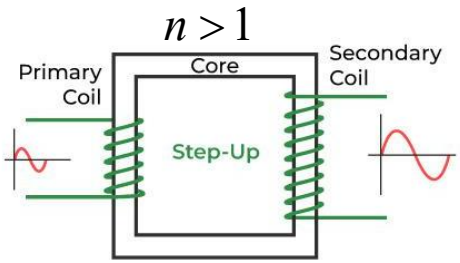

Step-Up Transformer

HALF-WAVE RECTIFIER

- A diode is connected to an ac source and to a load resistor R_L, forming a *half-wave rectifier 半波整流器*.

- When the sinusoidal voltage (V_{in}) goes positive, the diode is forward-biased and conducts current through the load resistor R_L.

- When the input voltage goes negative during the second half of its cycle, the diode is reverse-biased.

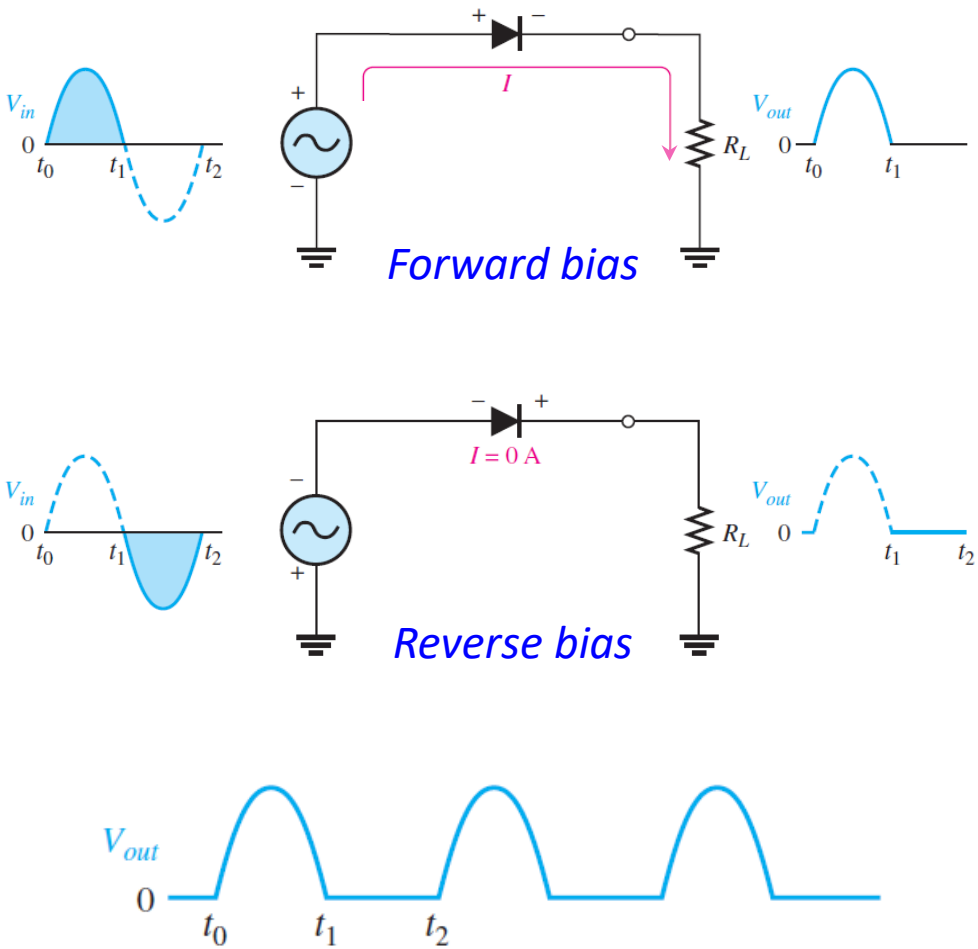

AC SIGNAL

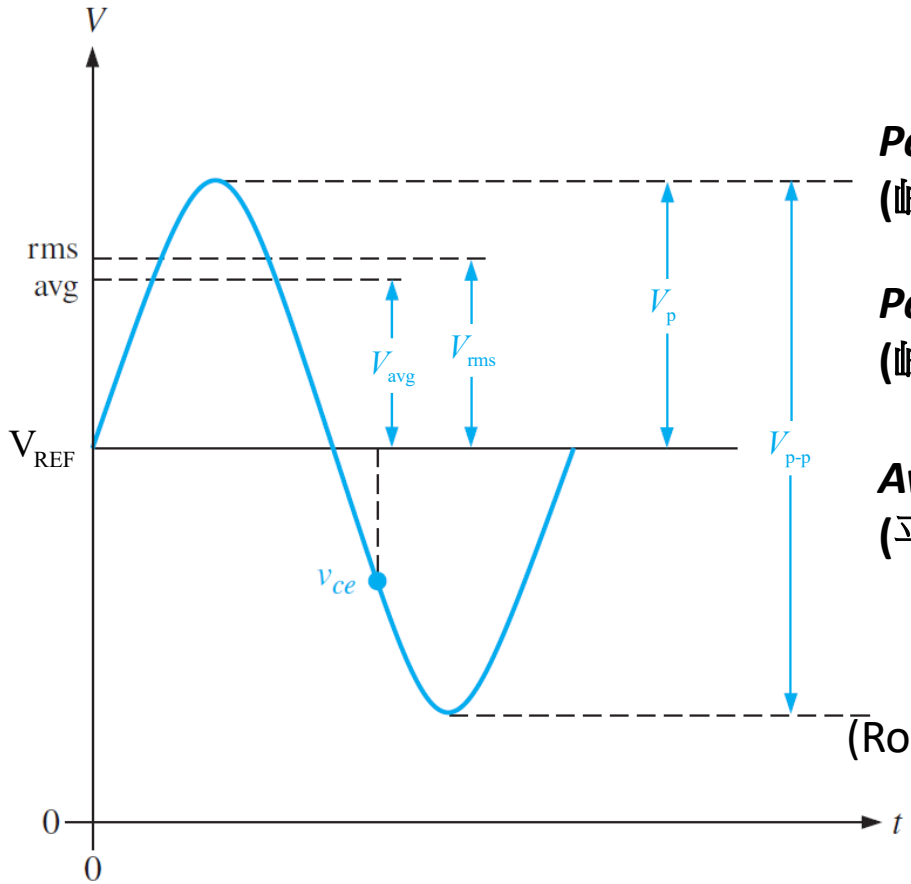

Peak voltage: $V_p = \max(v(t)) - V_{REF}$
(峰值電壓)

Peak-to-peak voltage: $V_{p\text{-}p} = \max(v(t)) - \min(v(t))$
(峰對峰值電壓)

Average voltage: $V_{avg} = \frac{1}{T}\int_0^T v(t)dt$
(平準值電壓)

RMS voltage: $V_{rms} = \sqrt{\frac{1}{T}\int_0^T v(t)^2 dt}$
(Root-mean-square)
方均根電壓

AVERAGE VALUE

- The *average value 平準值* of the half-wave rectified output voltage is the value you would measure on a *DC voltmeter 直流電壓表*.

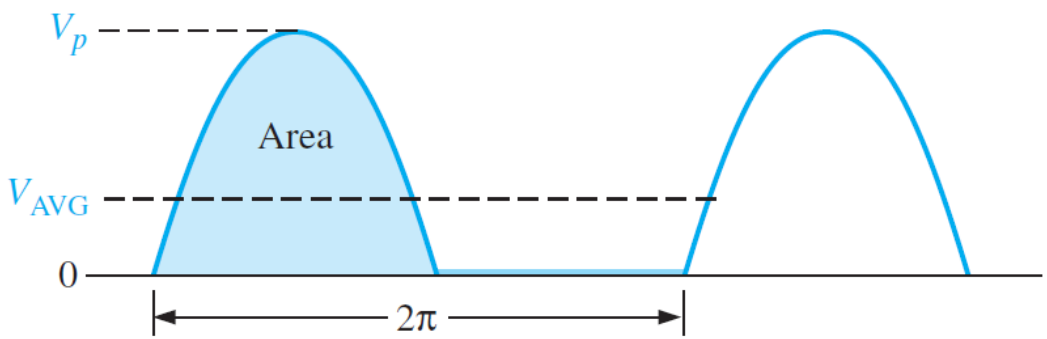

$$V_{AVG} = \frac{1}{2\pi}\int_0^{2\pi} v(t)dt = \frac{1}{2\pi}\int_0^{\pi} V_p \sin(t)dt = -\frac{V_p}{2\pi}\cos(t)\Big|_0^{\pi} = -\frac{V_p}{2\pi}\left[(-1)-1\right]$$

$$V_{AVG} = \frac{V_p}{\pi} = 31.8\% \times V_p$$

RMS VALUE

Trigonometric Identity

$$\cos(2x) = 1 - 2\sin^2(x)$$

- The *root-mean-square (RMS) value 方均根值* of the half-wave rectified output voltage is the value you would measure on a *AC voltmeter 交流電壓表*.

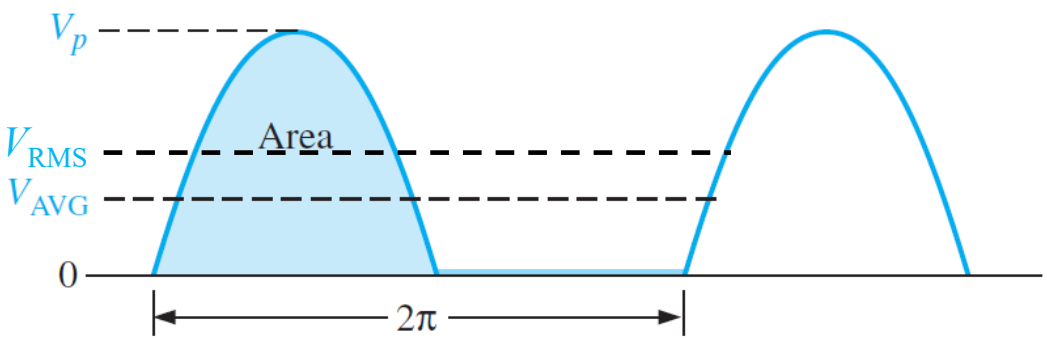

$$V_{RMS} = \sqrt{\frac{1}{2\pi}\int_0^{2\pi} v(t)^2\,dt} = \sqrt{\frac{1}{2\pi}\int_0^{\pi} V_p^2 \sin^2(t)dt} = \sqrt{\frac{V_p^2}{2\pi}\int_0^{\pi}\frac{1-\cos(2t)}{2}dt}$$

$$= \sqrt{\frac{V_p^2}{4\pi}\left[t - \tfrac{1}{2}\sin(2t)\right]_0^{\pi}} = \sqrt{\frac{V_p^2}{4}} \quad \Rightarrow \quad V_{RMS} = \frac{V_p}{2} = 50\% \times V_p$$

EFFECT OF BARRIER POTENTIAL

- Previously, the diode was considered ideal. To be more practical, let us consider the practical diode model 使用模型 with the barrier potential 障礙電位 of 0.7 V from now on.

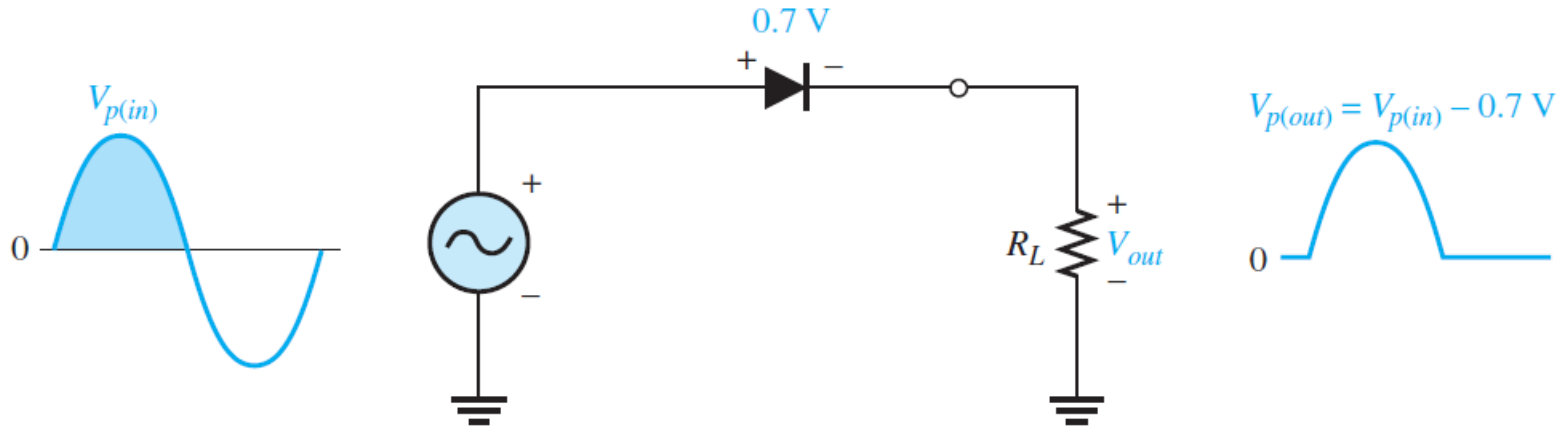

- It is acceptable to use the ideal model 理想模型, neglecting the effect of barrier the potential, when the peak value is much greater than the barrier potential (at least 10 V)
- **However**, we will use the practical model, taking the 0.7 V barrier potential into account unless stated otherwise.

EXAMPLE

- Draw the output voltages of the rectifier for the given input voltage, and calculate the peak output voltage.

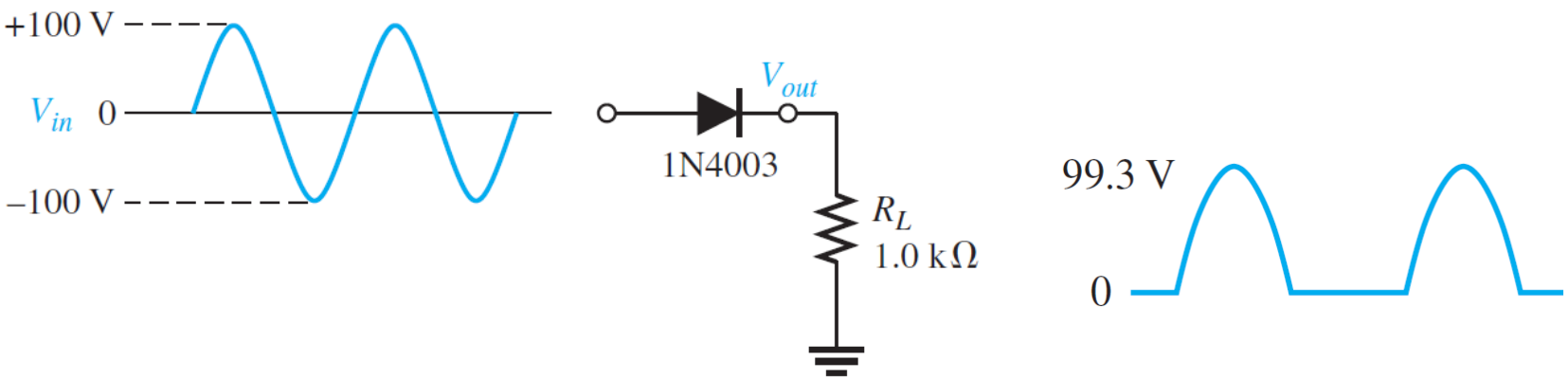

$$V_{p(out)} = V_{p(in)} - 0.7 = 99.3 \quad V$$

EXERCISE

- Draw the output voltages of the rectifier for the given input voltage, and calculate the peak output voltage.

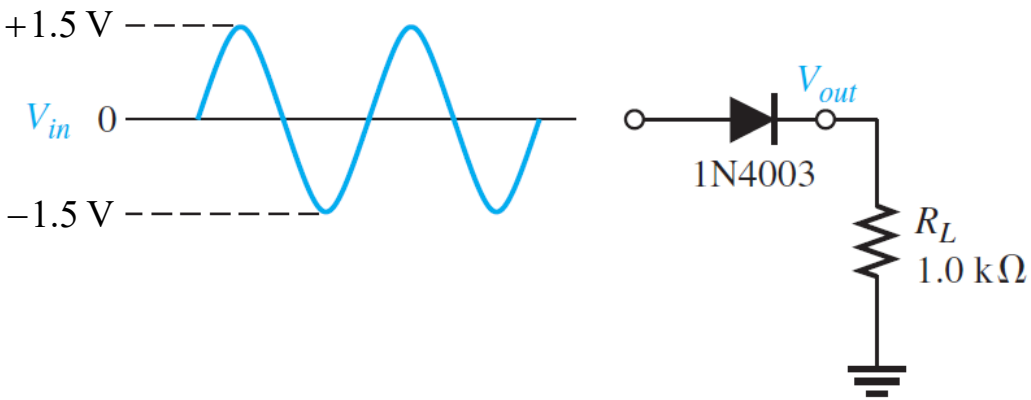

PEAK INVERSE VOLTAGE (PIV)

- The *peak inverse voltage (PIV、逆向峰值電壓)* equals the peak value of the input voltage, and the diode must be capable of withstanding this amount of repetitive reverse voltage 重複峰值反向電壓.
- A diode should be rated at least 20% higher than the PIV to avoid the breakdown.

$$\text{PIV} = V_{p(in)}$$

$$V_{BR} \geq 1.2 \times \text{PIV}$$

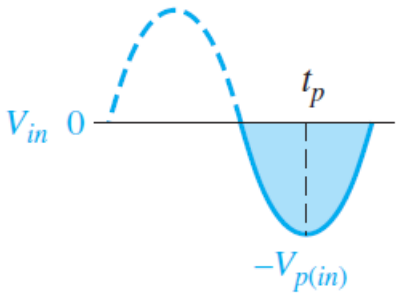

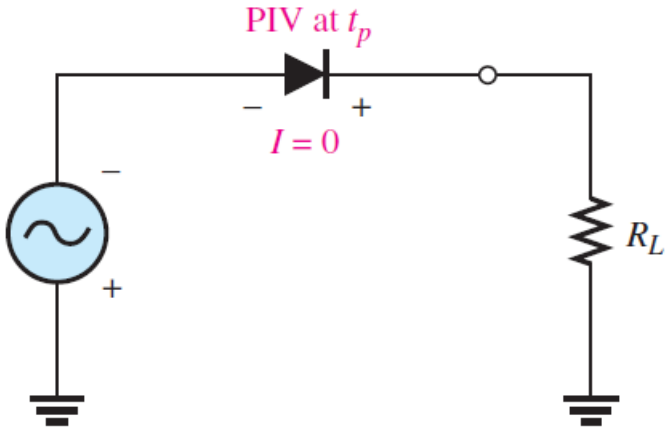

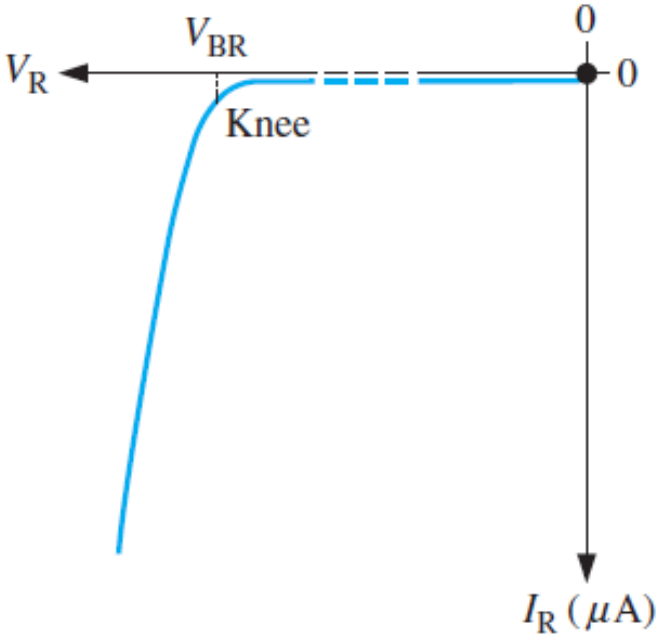

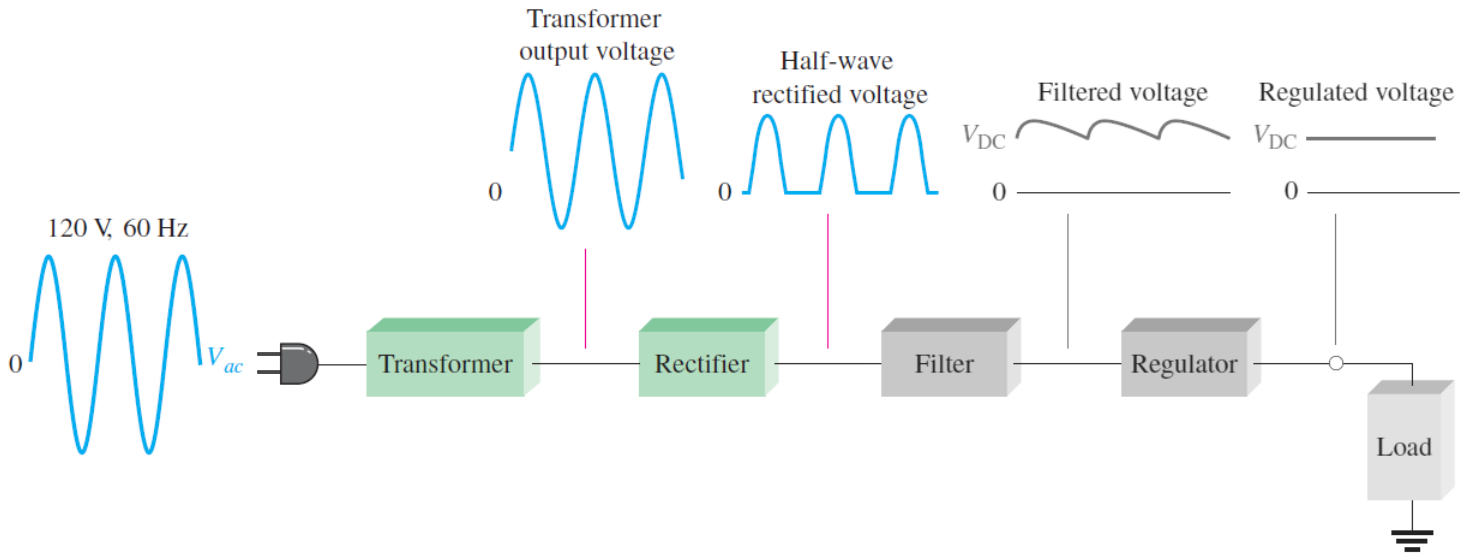

- A *transformer 變壓器* is used to couple the *AC input voltage 交流輸入電壓* from the source to the *rectifier 穩壓器*. Transformer coupling provides two advantages:
  1. The source voltage is stepped up/down (升降壓) as needed.
  2. The AC source is electrically isolated 隔絕 from the rectifier, thus preventing a shock hazard 避免電擊危險 in the secondary circuit.

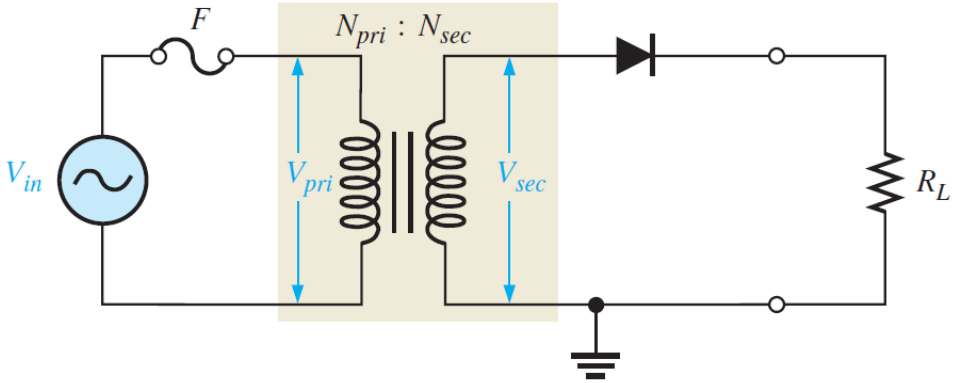

EXERCISE

- Draw the output voltage signal and calculate the peak output voltage.
- If buying the diode, what should be its breakdown voltage?

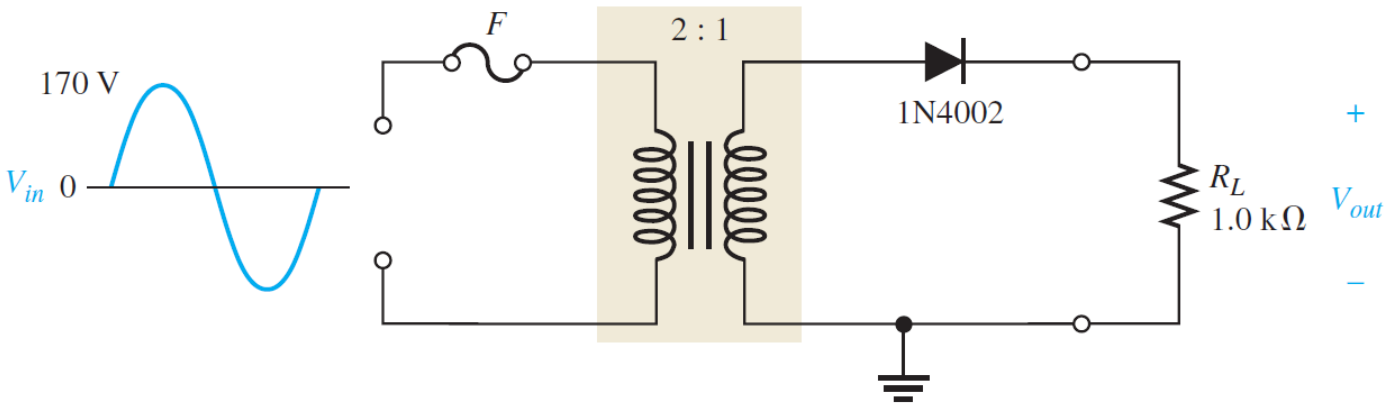

FULL-WAVE RECTIFIER

- A *full-wave rectifier 全波整流器* allows current through the load during the *entire 360° of the input cycle*, where a *half-wave rectifier 半波整流器* allows current through the load only during *one-half of the cycle*.

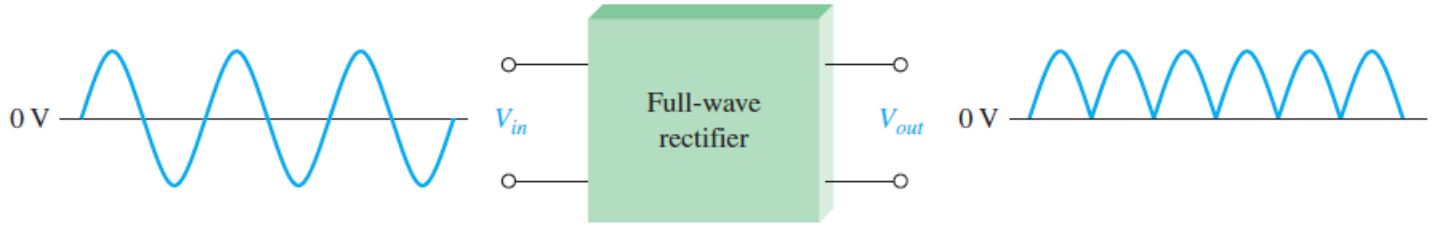

- What is the average value of the full-wave rectified voltage, with respect to the peak voltage V_p?

CENTER-TAPPED FULL-WAVE RECTIFIER

- A *center-tapped rectifier* **中心抽頭全波整流電路** is a type of full-wave rectifier that uses *two diodes* connected to the secondary of a **center-tapped transformer 中間抽頭式變壓器**.
- The input voltage is coupled through the transformer to the center-tapped secondary. *Half of the total secondary voltage appears between the* ***center tap*** *and each end of the secondary winding*.

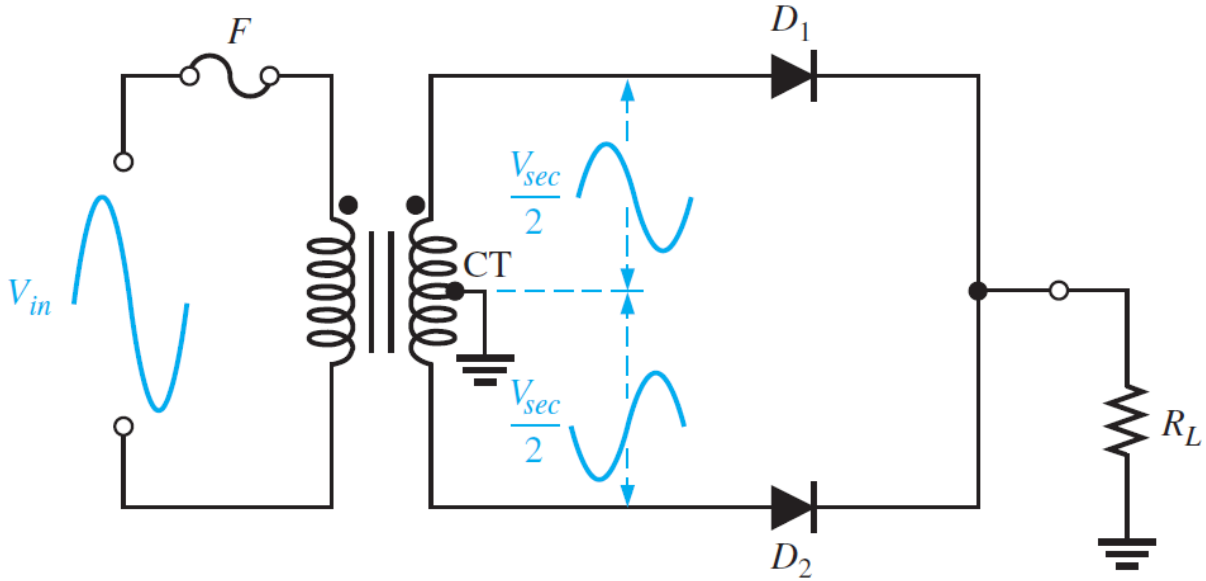

CENTER-TAPPED FULL-WAVE RECTIFIER

- For a ***positive half-cycle*** of the input voltage, the diode D_1 is forward-biased, while the diode D_2 is reverse-biased. The current path is through D1 and the load resistor RL.

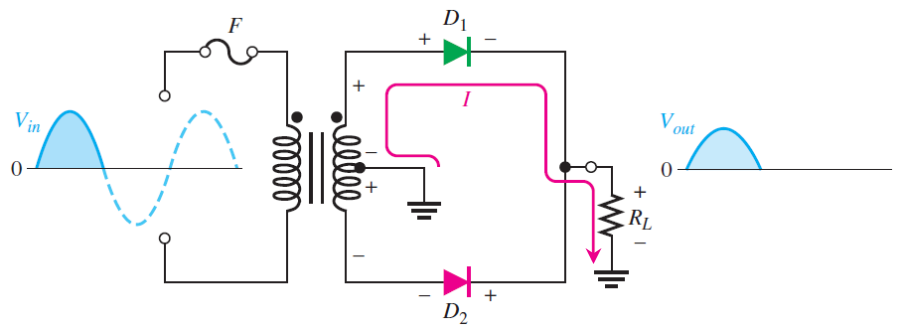

- For a ***negative half-cycle*** of the input voltage, the diode D_1 is reverse-biased, while the diode D_2 is forward-biased. The current path is through D2 and the load resistor RL.

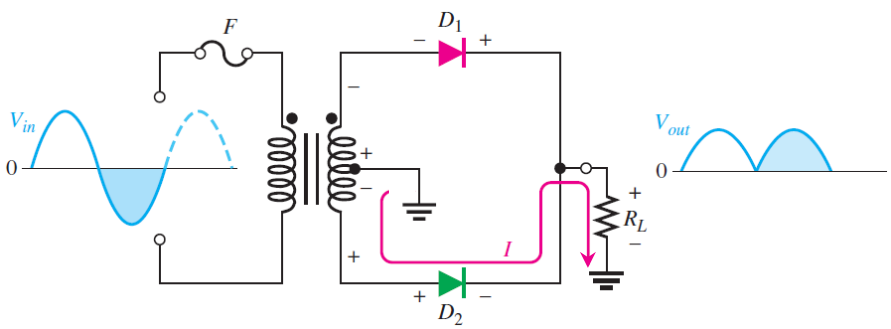

EXERCISE

- Draw the voltage waveform across the load resistor R_L.
- What minimum PIV rating must the diodes have?

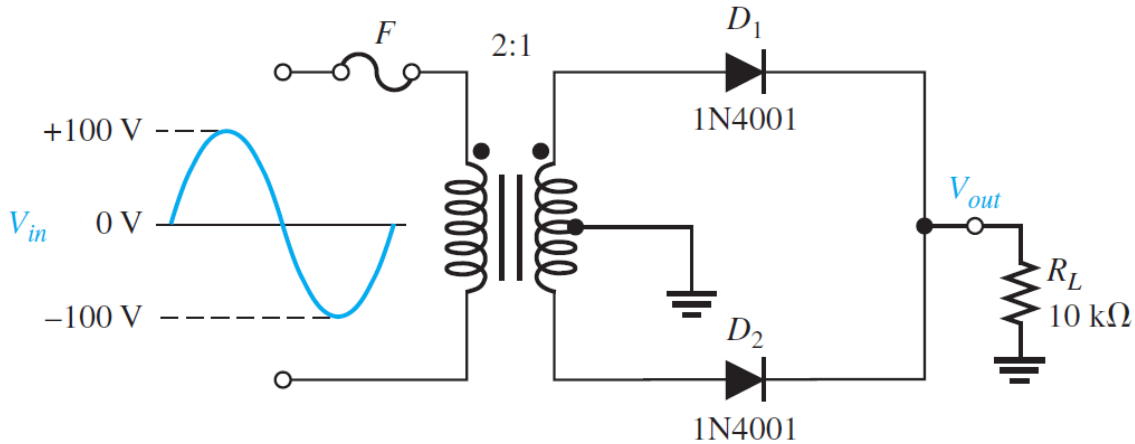

BRIDGE FULL-WAVE RECTIFIER

- The *bridge rectifier 橋式整流器* uses four diodes connected as the bridge circuit 電橋電路.

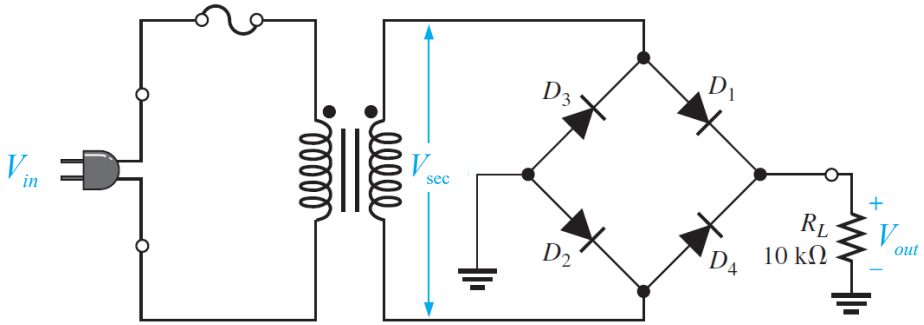

- When the *input cycle is positive*, diodes D_1 and D_2 are forward-biased and conduct current in the first-half of the cycle.

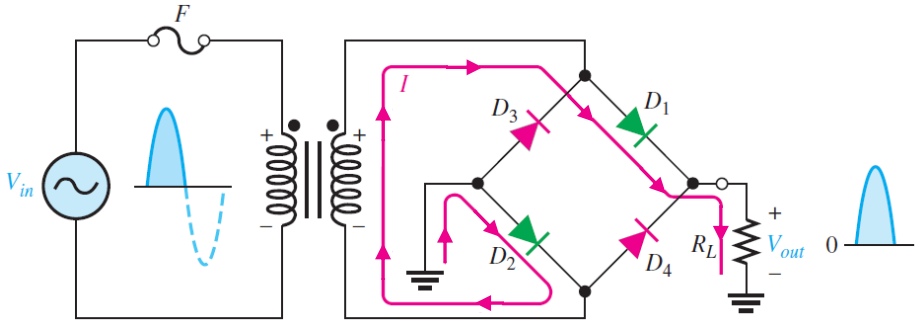

- When the *input cycle is negative*, diodes D_3 and D_4 are forward-biased and conduct current in the second-half of the cycle.

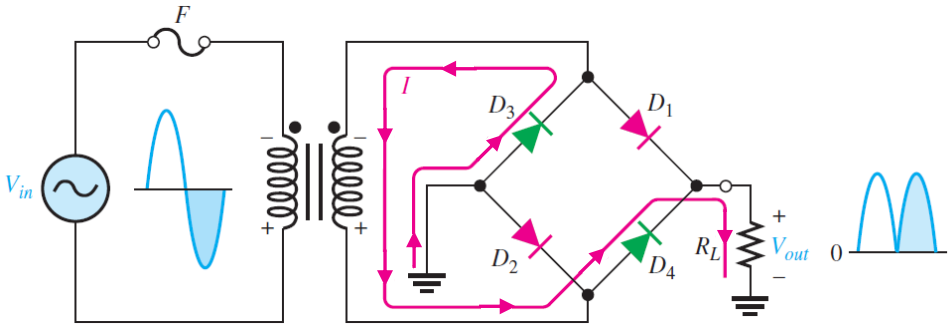

EXAMPLE

- The transformer is specified to have a 12 V rms secondary voltage for the standard 120 V across the primary. Draw the voltage waveform across the load resistor R_L.

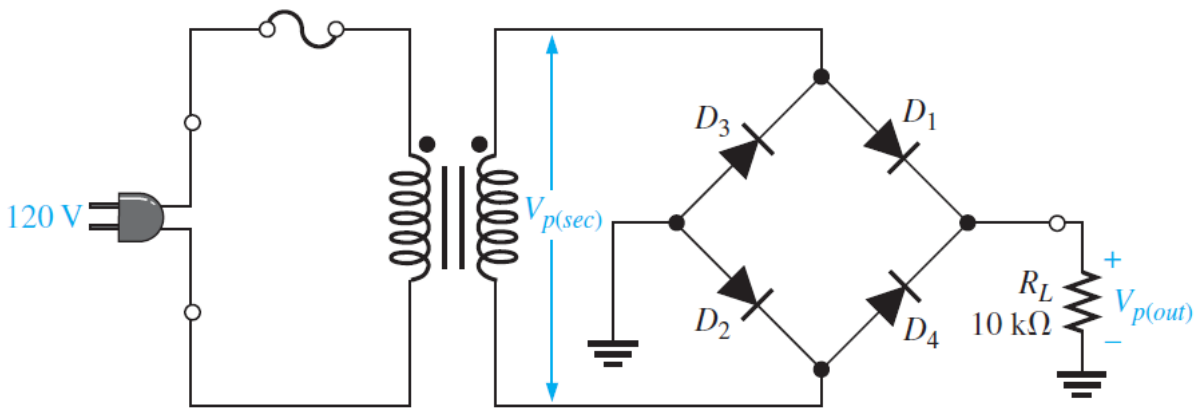

POWER SUPPLY FILTERS

- A ***power supply filter 電源濾波器*** ideally *eliminates the fluctuations 波動 in the output voltage of a halfwave or full-wave rectifier* and produces a ***near-constant DC voltage***.

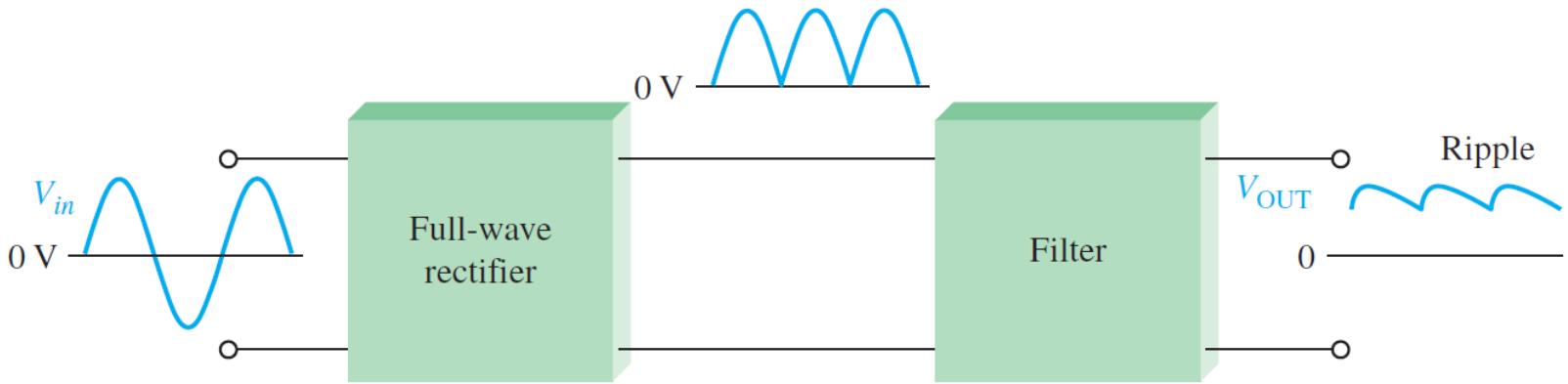

- The ***small amount of fluctuation*** in the filter output voltage is called ***ripple 漣波***.

CAPACITOR-INPUT FILTER

- A *capacitor-input filter* is to connect a capacitor from the rectifier output to ground, parallel to the load R_L.

1. During the positive first quarter-cycle of the input, the diode is forward-biased, charging the capacitor.
2. When the input begins to decrease below its peak, the capacitor retains its charge and the diode becomes reverse-biased. During the remaining part of the cycle, the capacitor can discharge only through the load R_L at a rate determined by the R_LC time constant.
3. During the first quarter of the next cycle, the diode turns forward-biased again, recharging the capacitor when exceeds the capacitor voltage.

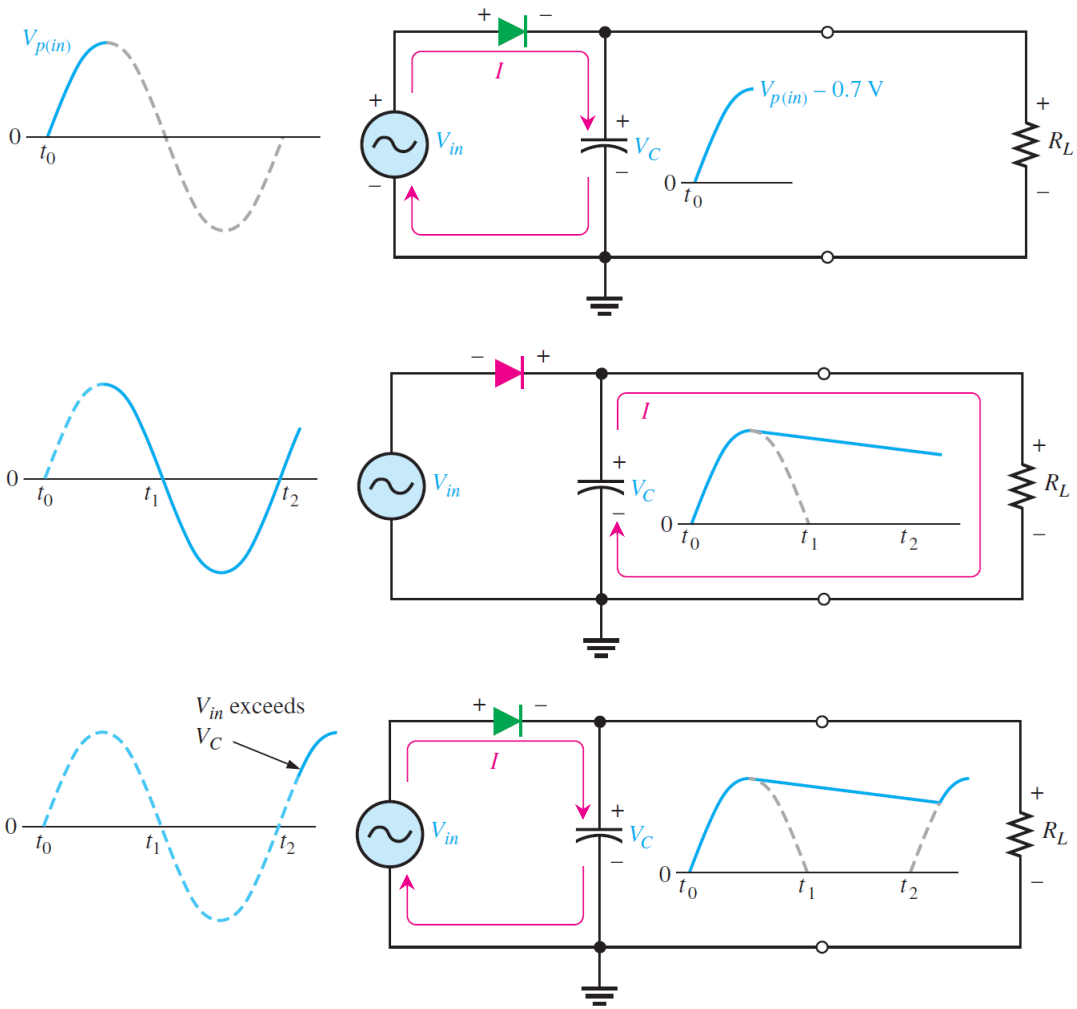

RIPPLE VOLTAGE

- The variation in the capacitor voltage due to the charging and discharging is called the *ripple voltage 漣波電壓*.
- Generally, *ripple is undesirable*; thus, the *smaller the ripple, the better the filtering action*.

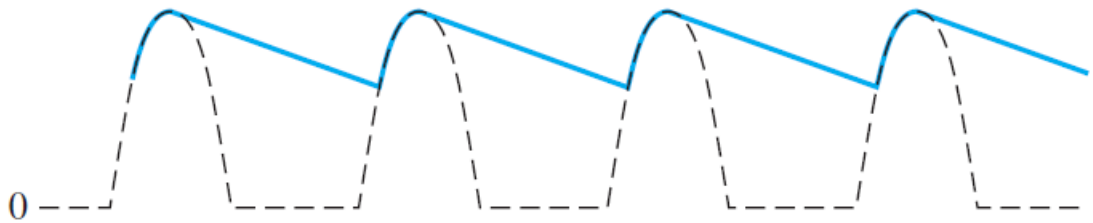

- *Smaller* **time constant**
- *Larger* **ripple**
- *Less* effective **filtering**

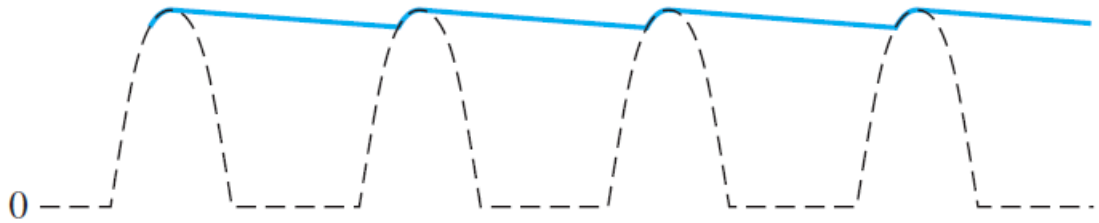

- *Larger* **time constant**
- *Smaller* **ripple**
- *More* effective **filtering**

RIPPLE VOLTAGE

- For a given input frequency, the output frequency 頻率 of a full-wave rectifier is twice that of a half-wave rectifier.
- This makes a *full-wave rectifier easier to filter* because of the shorter time between peaks.

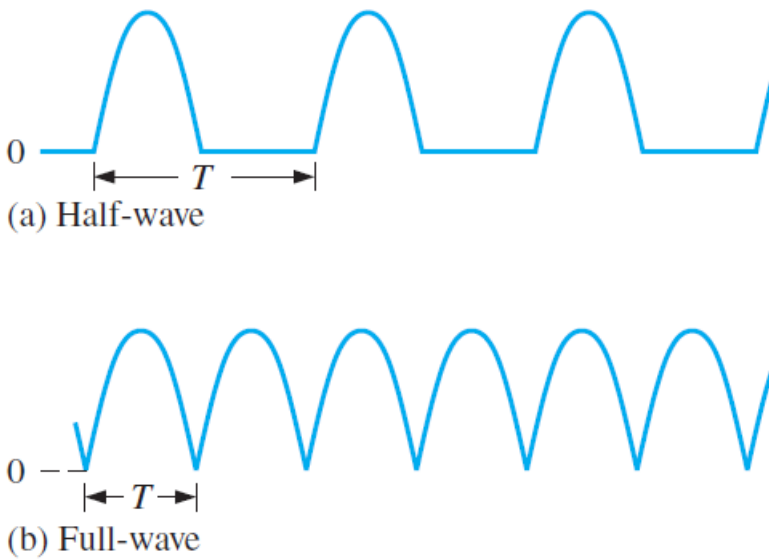

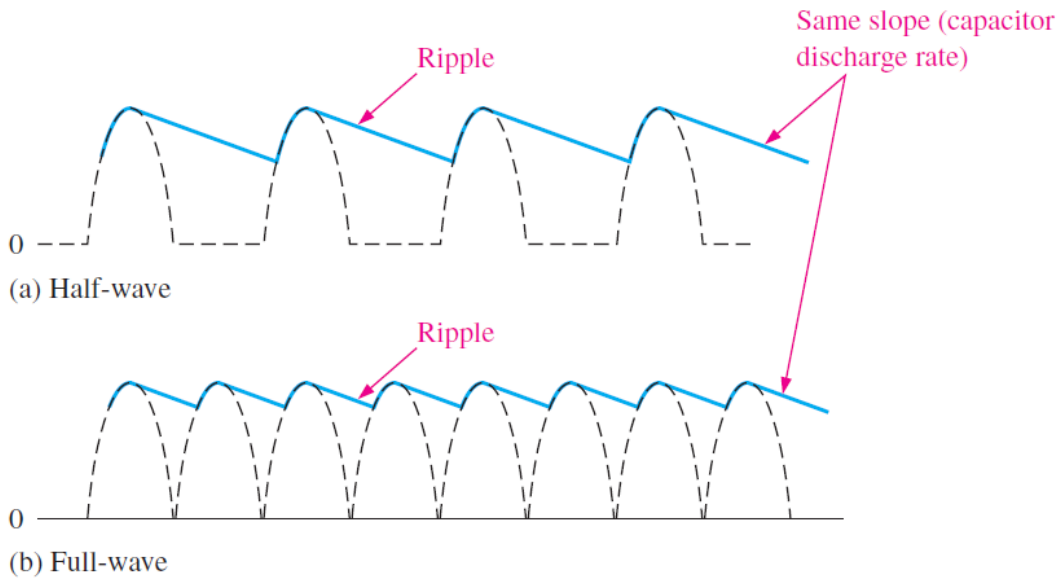

RIPPLE FACTOR

- The ***ripple factor*** (r、漣波因數) is an indication of the effectiveness of the filter and is defined as:

$$r = \frac{V_{r(pp)}}{V_{DC}}$$

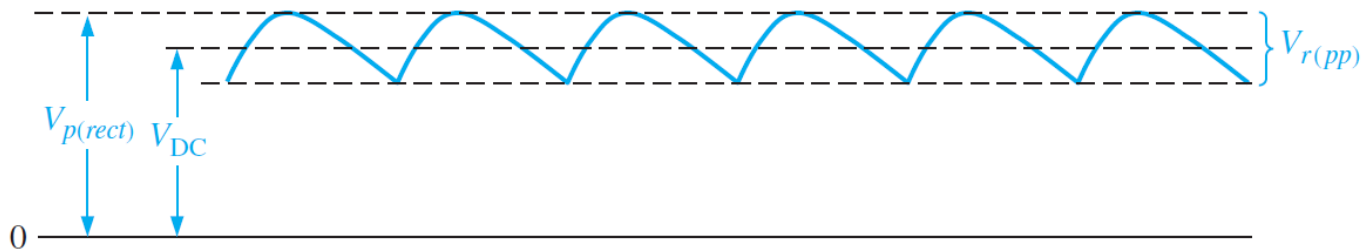

$$\text{where } V_{r(pp)} \cong \left(\frac{1}{fR_L C}\right) V_{p(rect)}; \quad V_{DC} \cong \left(1 - \frac{1}{2fR_L C}\right) V_{p(rect)}$$

- ➢ The ***lower*** the ripple factor, the ***better*** the filter.
- ➢ The ***ripple factor*** can be lowered by increasing either the value of the filter ***capacitor*** or the ***load resistance***.

VOLTAGE REGULATORS

- Although the *filter can significantly reduce the ripple* in the supply voltage, the *AC voltage level is not steady* (電源不穩).
- Hence, a *voltage regulator 電壓穩壓器* is connected to the output of a filtered rectifier and maintains a constant output voltage (or current) despite changes in the input, the load current, or the temperature.

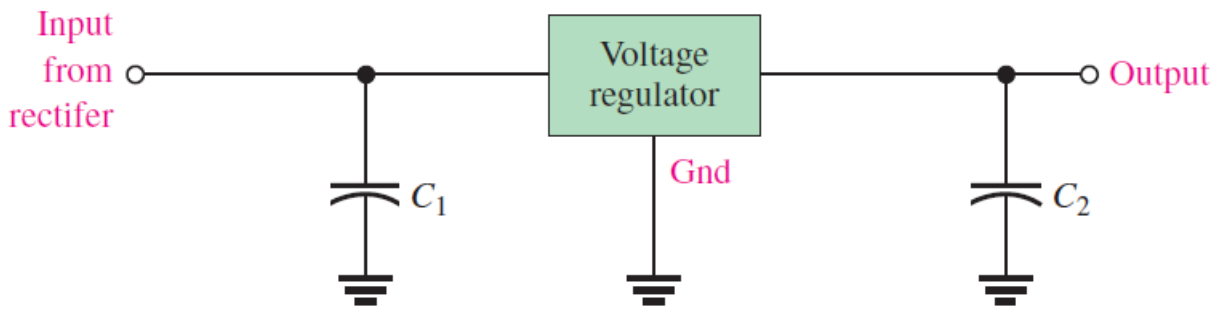

➢ The output capacitor C_2 is typically between 0.1 μF and 1.0 μF to improve the transient response.

EXAMPLE (5V DC POWER SUPPLY)

Diode bridge
二極體電橋

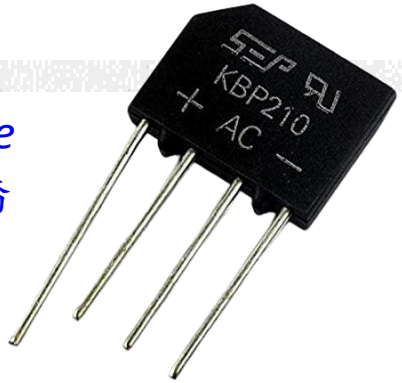

Voltage regulator
電壓穩壓器

78XX → +XX V
79XX → −XX V

Fuse
保險絲

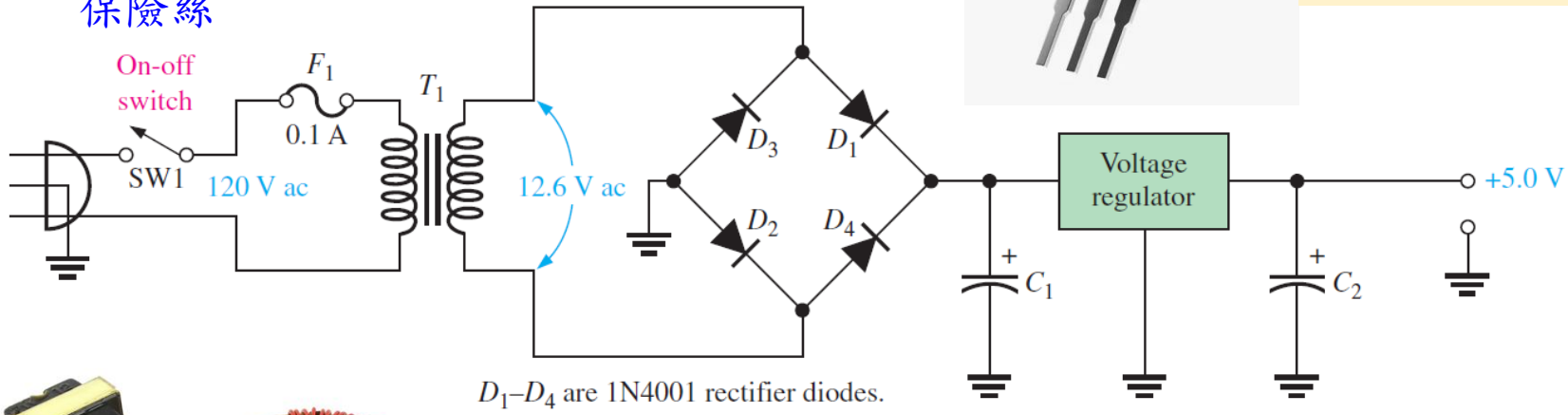

D_1–D_4 are 1N4001 rectifier diodes.

Transformer
變壓器

SPECIAL APPLICATIONS

DIODE LIMITERS

- Diode limiters (or clippers) 限幅器 are used to *clip off portions of signal voltages* above or below certain levels. An example of a diode positive limiter:

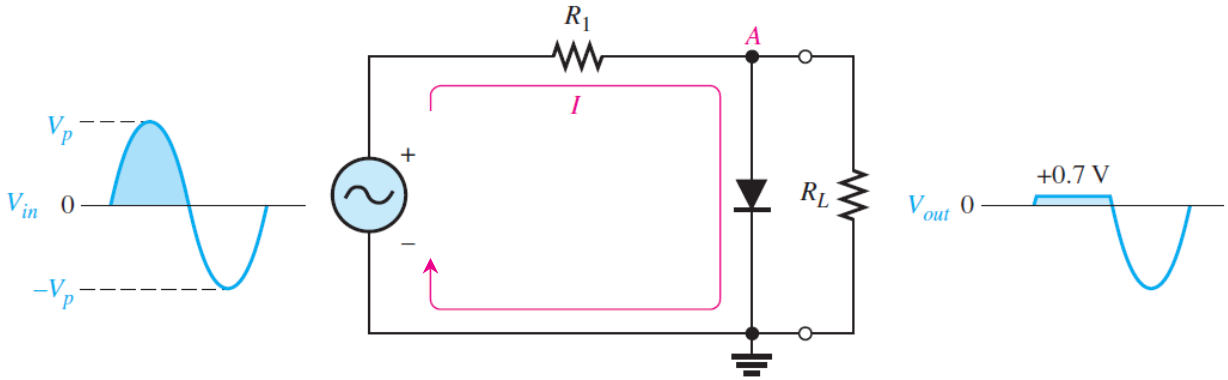

1. As the input voltage goes positive, the diode becomes forward-biased and conducts current. Point A is limited to +0.7 V when the input voltage exceeds this value.
2. When the input voltage goes back below 0.7 V, the diode is reverse-biased and appears as an open.
3. The output voltage looks like the negative part of the input voltage, but with a magnitude determined by the voltage divider.

EXERCISE

- Draw the output voltage signal V_{out} across R_L.
- What is the peak output voltage $V_{(p)out}$?

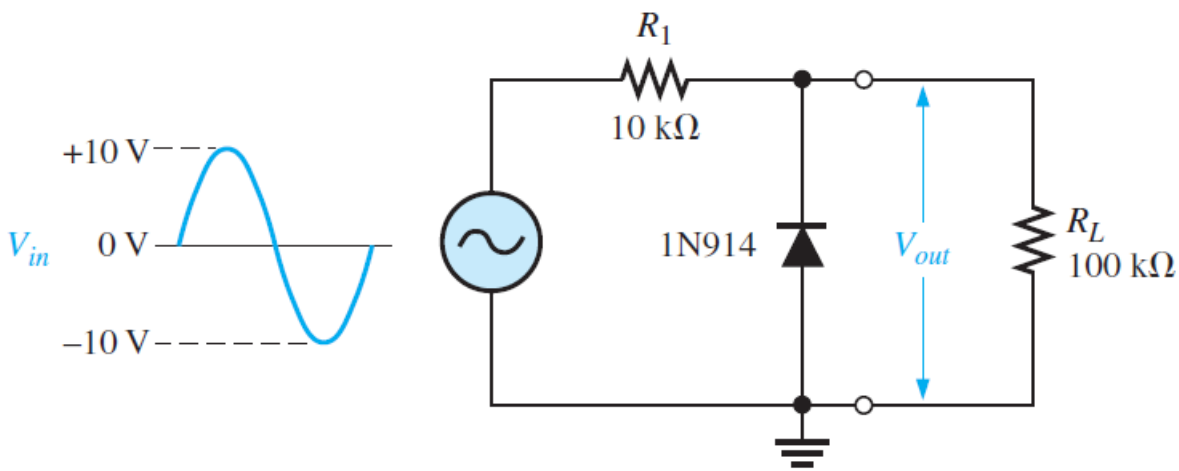

DIODE BIASED LIMITERS

- The level to which an AC voltage is limited can be adjusted by **adding a bias voltage 偏壓**, V_{BIAS}, in series with the diode.

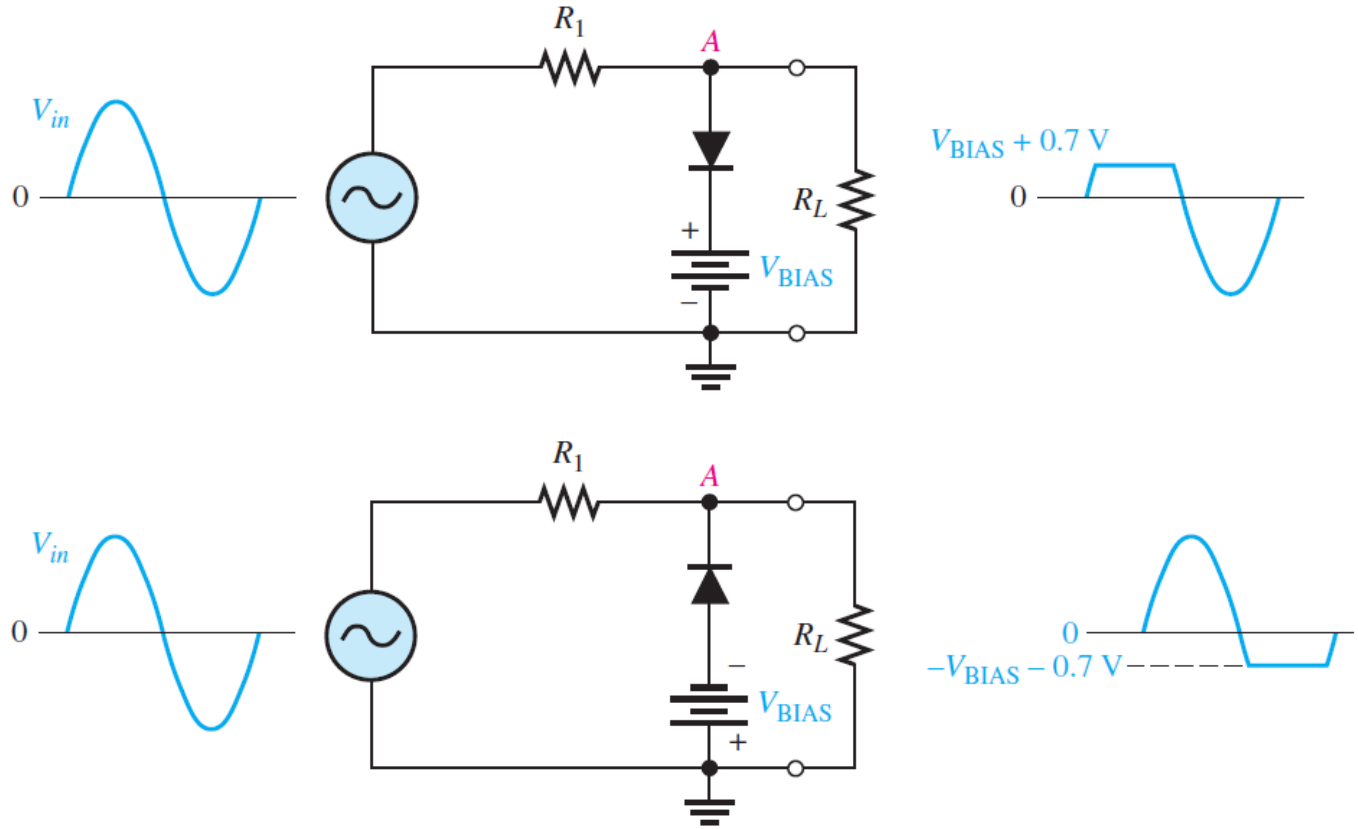

DIODE BIASED LIMITERS

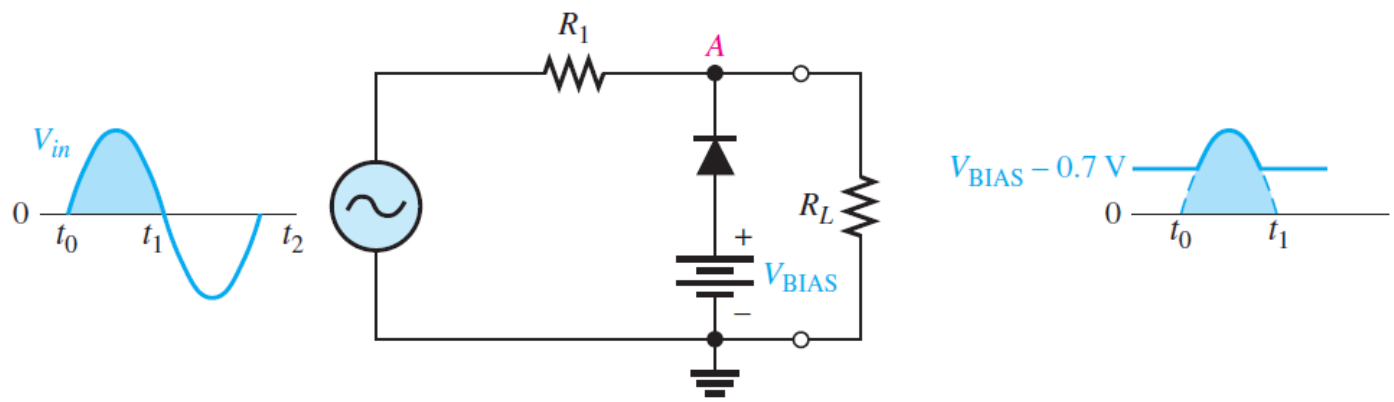

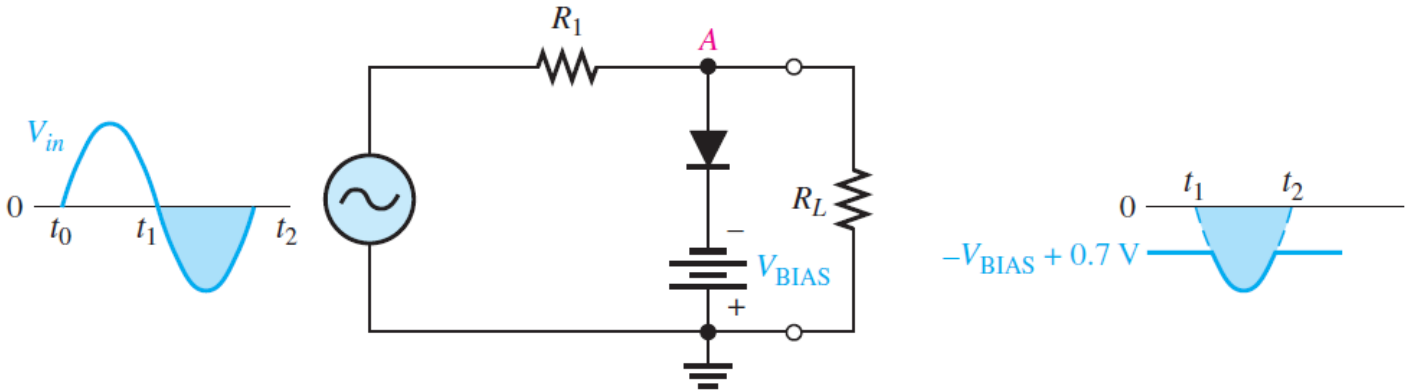

EXERCISE

- Determine the output voltage waveform.

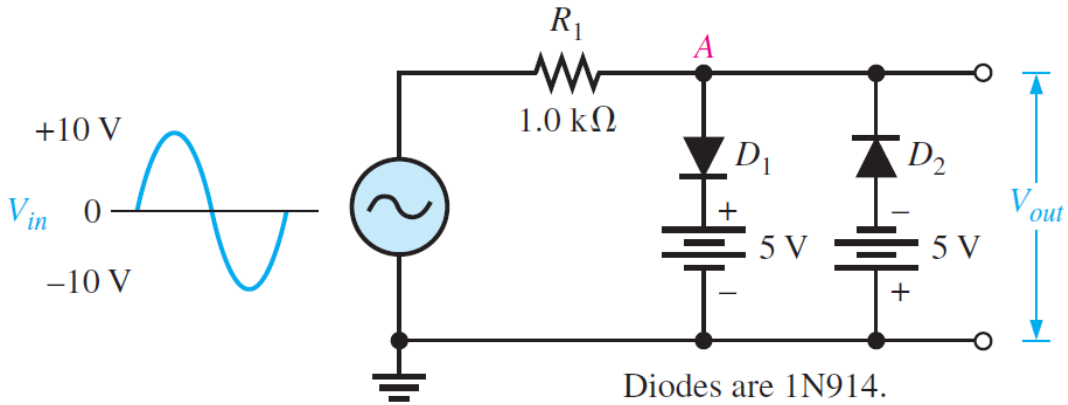

DIODE CLAMPERS

- A *clamper* 箝位器 adds a DC level (or an offset) to an AC voltage.

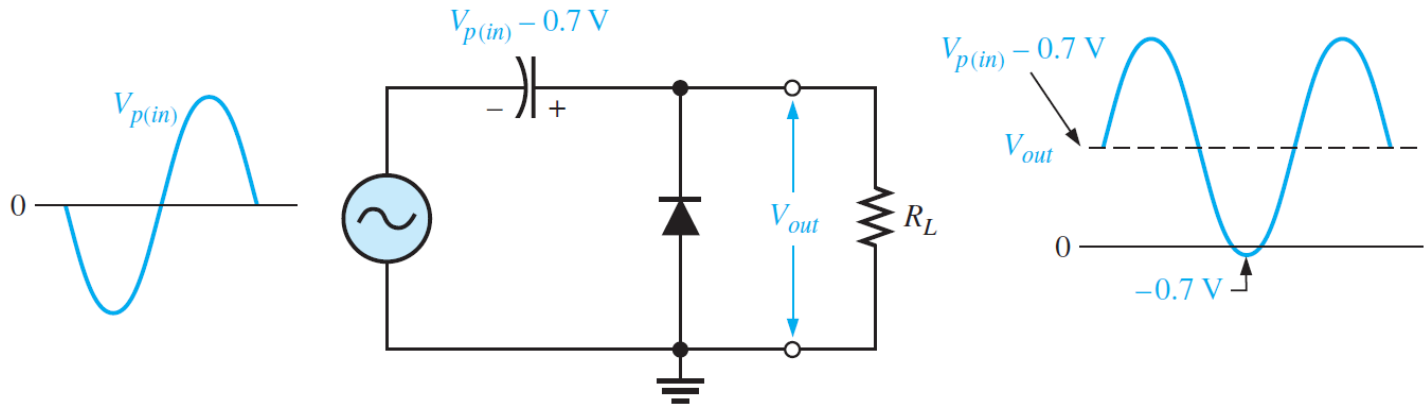

1. When the input voltage initially goes negative, the diode is forward-biased, allowing the capacitor to charge.
2. After the negative peak, the capacitor acts as another DC supply, levitating the output voltage by a DC level.

➢ The RC time constant must large enough (100 times the period) to maintain the DC level. Otherwise, the capacitor could discharge and distort the waveform.

EXERCISE

- Assume that RC is large enough to prevent significant capacitor discharge. What is the output voltage that you would expect to observe across RL in the clamping circuit?

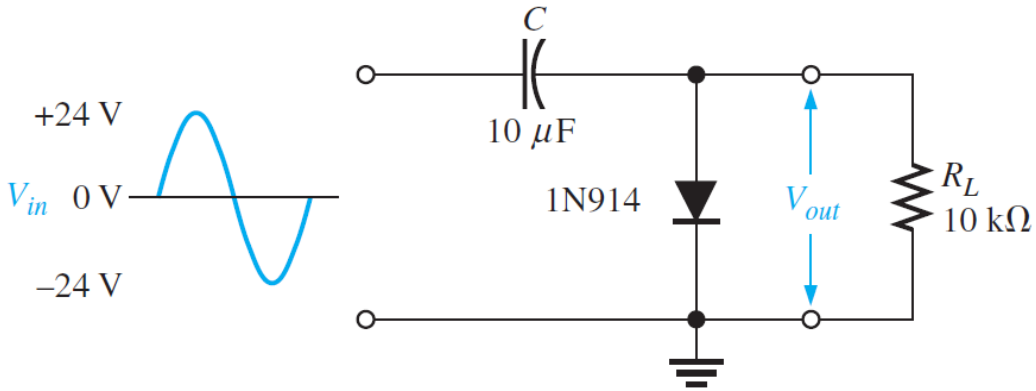

DIODE MULTIPLIERS

- A *voltage doubler 倍壓器* is a voltage multiplier with a *multiplication factor of two*.

1. During the positive half-cycle of the secondary voltage, diode D_1 is forward-biased and D_2 is reverse-biased. Capacitor C_1 is charged to the peak of the secondary voltage (Vp).

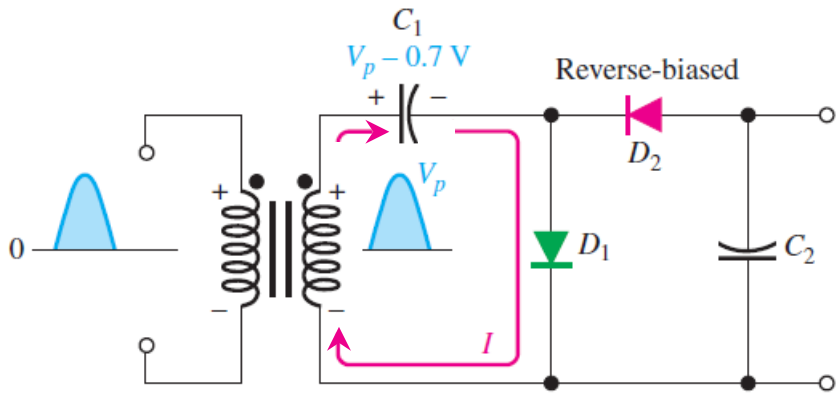

2. During the negative half-cycle, diode D_2 is forward-biased and D_1 is reverse-biased. Since C_1 can't discharge, the peak voltage on C_1 adds to the secondary voltage to charge C_2 to approximately $2V_p$.

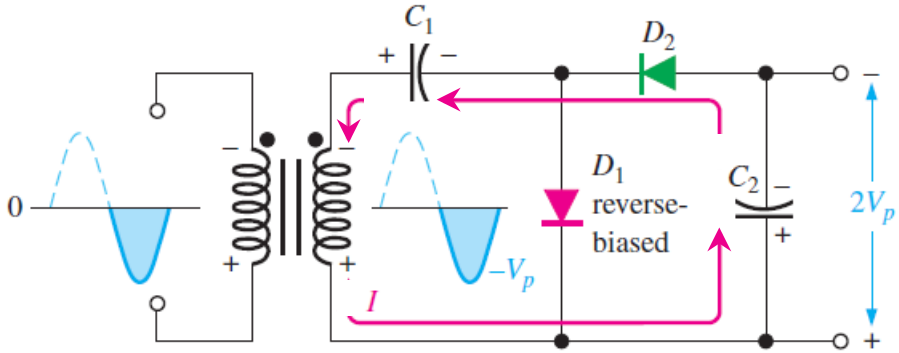

DATASHEET

- In markets, there are *too many models of electronic devices*, including diodes, transistors, Op-amp, etc.
- *Every model has different specification*. It is necessary to read its datasheet before design, purchase, or use them. Every component has different parameters to be concerned.

VISHAY

1N4001, 1N4002, 1N4003, 1N4004, 1N4005, 1N4006, 1N4007

www.vishay.com

Vishay General Semiconductor

General Purpose Plastic Rectifier

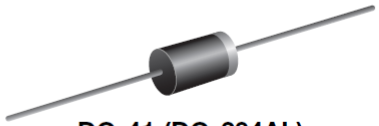

DO-41 (DO-204AL)

FEATURES

- Low forward voltage drop
- Low leakage current
- High forward surge capability
- Solder dip 275 °C max. 10 s, per JESD 22-B106
- Material categorization: for definitions of compliance please see www.vishay.com/doc?99912

Pb

e3

RoHS COMPLIANT

General Purpose Plastic Rectifier

DO-41 (DO-204AL)

FEATURES

- Low forward voltage drop
- Low leakage current
- High forward surge capability
- Solder dip 275 °C max. 10 s, per JESD 22-B106
- Material categorization: for definitions of compliance please see www.vishay.com/doc?99912

Pb e3 RoHS COMPLIANT

PRIMARY CHARACTERISTICS	
$I_{F(AV)}$	1.0 A
V_{RRM}	50 V, 100 V, 200 V, 400 V, 600 V, 800 V, 1000 V
I_{FSM} (8.3 ms sine-wave)	30 A
I_{FSM} (square wave t_p = 1 ms)	45 A
V_F	1.1 V
I_R	5.0 μA
T_J max.	150 °C
Package	DO-41 (DO-204AL)
Circuit configuration	Single

TYPICAL APPLICATIONS

For use in general purpose rectification of power supplies, inverters, converters, and freewheeling diodes application.

MECHANICAL DATA

Case: DO-41 (DO-204AL), molded epoxy body
Molding compound meets UL 94 V-0 flammability rating
Base P/N-E3 - RoHS-compliant, commercial grade

Terminals: matte tin plated leads, solderable per J-STD-002 and JESD 22-B102
E3 suffix meets JESD 201 class 1A whisker test

Polarity: color band denotes cathode end

MAXIMUM RATINGS (T_A = 25 °C unless otherwise noted)

PARAMETER	SYMBOL	1N4001	1N4002	1N4003	1N4004	1N4005	1N4006	1N4007	UNIT
Maximum repetitive peak reverse voltage	V_{RRM}	50	100	200	400	600	800	1000	V
Maximum RMS voltage	V_{RMS}	35	70	140	280	420	560	700	V