DAY 02

PROPERTIES OF MATTER AND THEIR MEASUREMENT

- Every substance has unique or characteristic properties. These properties can be classified into two categories,
  - **Physical Properties**
  - **Chemical Properties**

- **Physical properties** are those properties which can be measured or observed without changing the identity or the composition of the substance.

- Examples : colour, odour, melting point, boiling point, density, etc.

- **Chemical properties** are those properties whose measurement or observation requires a chemical change to occur.

- Examples : Acidity or basicity, combustibility, etc.

MEASUREMENT

- The quantities which we come across during the scientific studies are called physical quantities.
- A **unit** may be defined as the standard of reference chosen to measure or express any physical quantity.

INTERNATIONAL SYSTEM OF UNITS (SI)

- In 1960, the International Committee of Weights and Measures recommended the use of International System of Units, abbreviated as **SI Units.**
- The seven basic units in SI system are given in the following table.

Physical Quantity	Abbre viation	Name of Unit	Symbol
Length	l	metre	m
Mass	m	kilogram	kg
Time	t	second	s
Electric current	I	ampere	A
Thermodynamic Temperature	T	kelvin	K
Luminous intensity	I_v	candela	cd
Amount of substance	n	mole	mol

- The other physical quantities, such as speed, volume, density, etc., can be derived from these quantities.
- The fundamental units of **metric system** are gram for mass, the metre for length and the litre for the volume of fluids.

MASS AND WEIGHT

- Mass of a substance is the amount of matter present in it while weight is the force exerted by gravity on an object.
- The mass of a substance is constant whereas its weight may vary from one place to another due to change in gravity.

$W = mg$

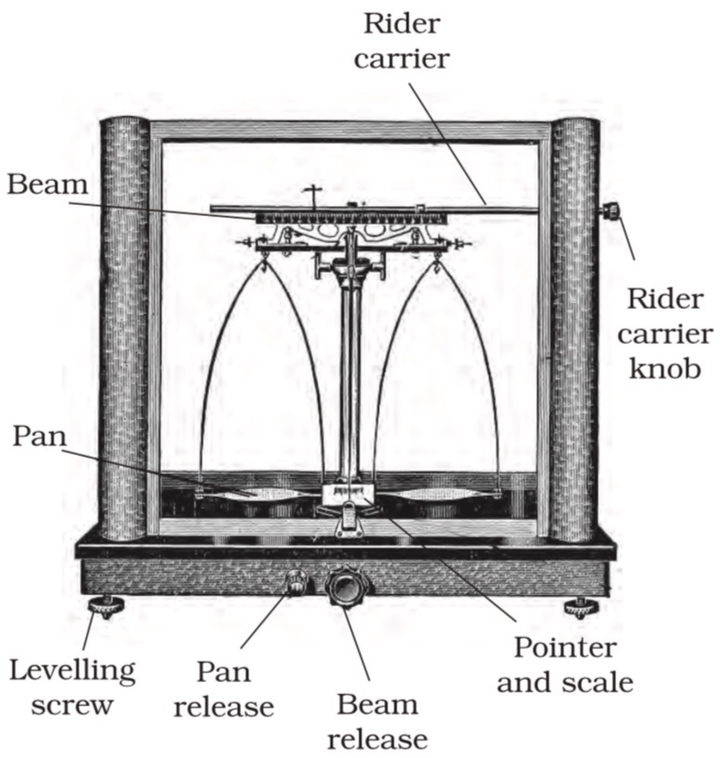

Fig. 1.5 *Analytical balance*

VOLUME

- Volume is the amont of space occupied by a substance.
- Volume has the units of (length)^3.
- SI system, volume has units of m^3.
- Smaller units such as cm^3 or dm^3 are also used.
- A common unit, litre (L) which is not an SI unit, is used for the measurement of volume of liquids

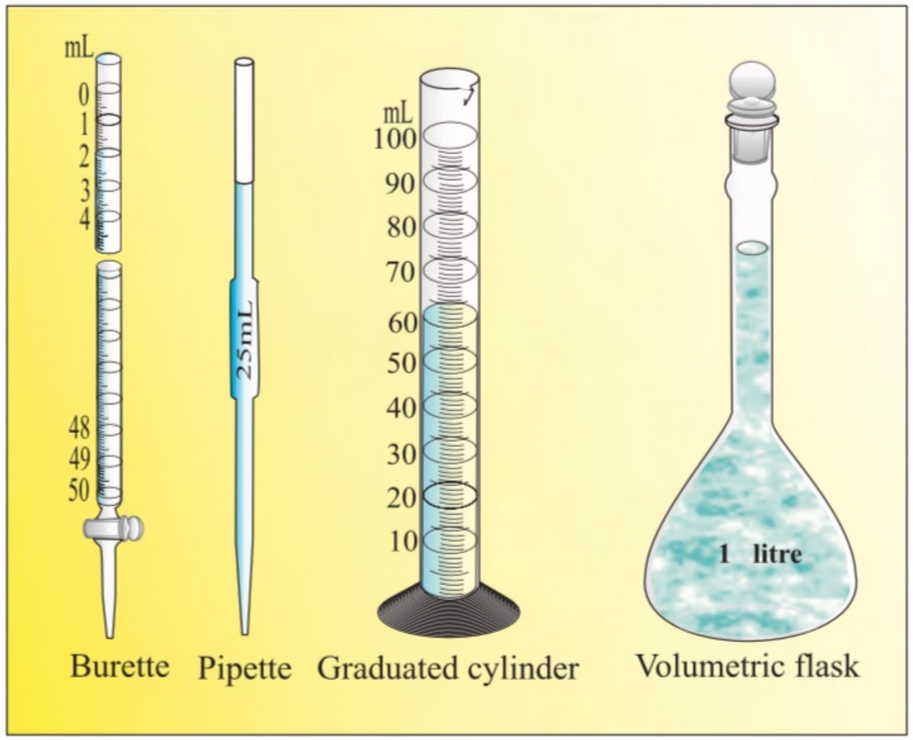

Fig. 1.7 *Some volume measuring devices*

$$1m^3 = 10^3L = 10^3dm^3 = 10^6cm^3 = 10^6mL$$

$$1L = 1dm^3 \qquad 1mL = 1cm^3$$

DENSITY

- Density of a substance is its amount of mass per unit volume.
- SI units of density can be obtained as follows:

$$\text{SI unit of density} = \frac{\text{SI unit of mass}}{\text{SI unit of volume}} = kg / m^3$$

- It can be expressed in g / cm^3 also, where mass is expressed in gram and volume is expressed in cm^3.

$$d = \frac{m}{V} = \frac{kg}{m^3}$$

TEMPERATURE

- Temperature is the degree of hotness or coldness
- There are three common scales to measure temperature

Degree celsius	:	**°C**
Degree Fahrenheit	:	**°F**
Kelvin	:	**K**

- Kelvin (K) is the SI unit.

$$T\,(^{o}F) = \frac{9}{5}\,T\,(^{o}C) + 32$$

$$T\,(K) = T\,(^{o}C) + 273.15$$

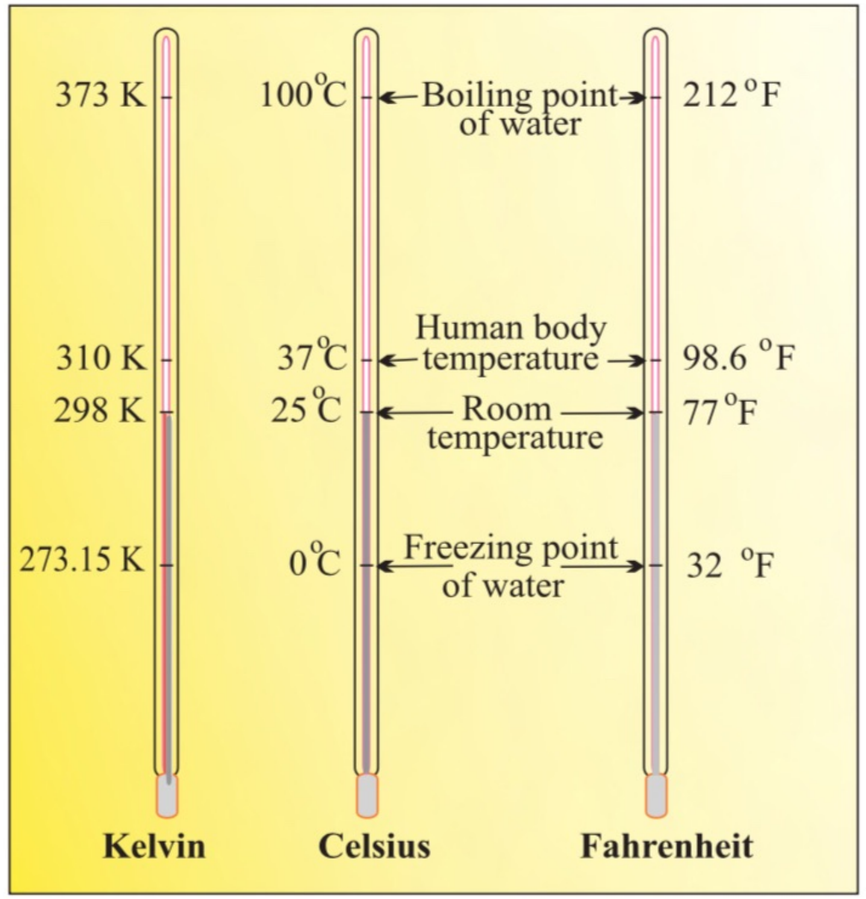

Fig. 1.8 *Thermometers using different temperature scales*

$\frac{9}{5} \times 37 + 32$

PREFIXES FOR EXPRESSING THE DECIMAL FRACTIONS IN THE SI SYSTEM

MULTIPLE	PREFIX	SYMBOL
10^{24}	yotta	Y
10^{21}	zetta	Z
10^{18}	exa	E
10^{15}	peta	P
10^{12}	tera	T

10^9	giga	G
10^6	mega	M
10^3	kilo	k
10^2	hecto	h
10	deca	da
10^{-1}	deci	d
10^{-2}	centi	c
10^{-3}	milli	m

10^{-6}	micro	μ
10^{-9}	nano	n
10^{-12}	pico	p
10^{-15}	femto	f
10^{-18}	atto	a
10^{-21}	zepto	z
10^{-24}	yocto	y

BOARD EXAM

01. Fill in the blanks.

Physical quantity	SI Unit
Mass	.....
.....	Kelvin
.....	Candela
Pressure	.....

Answer :

PHYSICAL QUANTITY	SI UNIT
Mass	Kilogram
Temperature	Kelvin
Luminous intensity	Candela
Pressure	Pascal

$$P = \frac{F}{A} = \frac{ma}{A} = \frac{m \times V}{A\ t} = \frac{m \times d}{A\ t\ t} = \frac{Kg\,m}{m^2 s^2}$$

$$Kg\,m^{-1} s^{-2}$$

BOARD EXAM

02. Match the following prefixes with their multiples:

	Prefixes	Multiples
(i)	micro	10^{6}
(ii)	deca	10^{-6}
(iii)	mega	10^{9}
(iv)	giga	10^{-15}
(v)	femto	10

Answer :

Micro : 10^{-6}

Deca : 10

Mega : 10^{6}

Giga : 10^{9}

Femto : 10^{-15}

HOME ASSIGNMENT

TRY YOUR SELF

04. What do you mean by temperature ? Write its different units. How are they inter related?

TRY YOUR SELF

05. What do you mean by volume ? Write its SI units. write the relation between SI unit of volume with litre ?

$l \times l \times l$

$m \times m \times m = \underline{\underline{m^3}}$