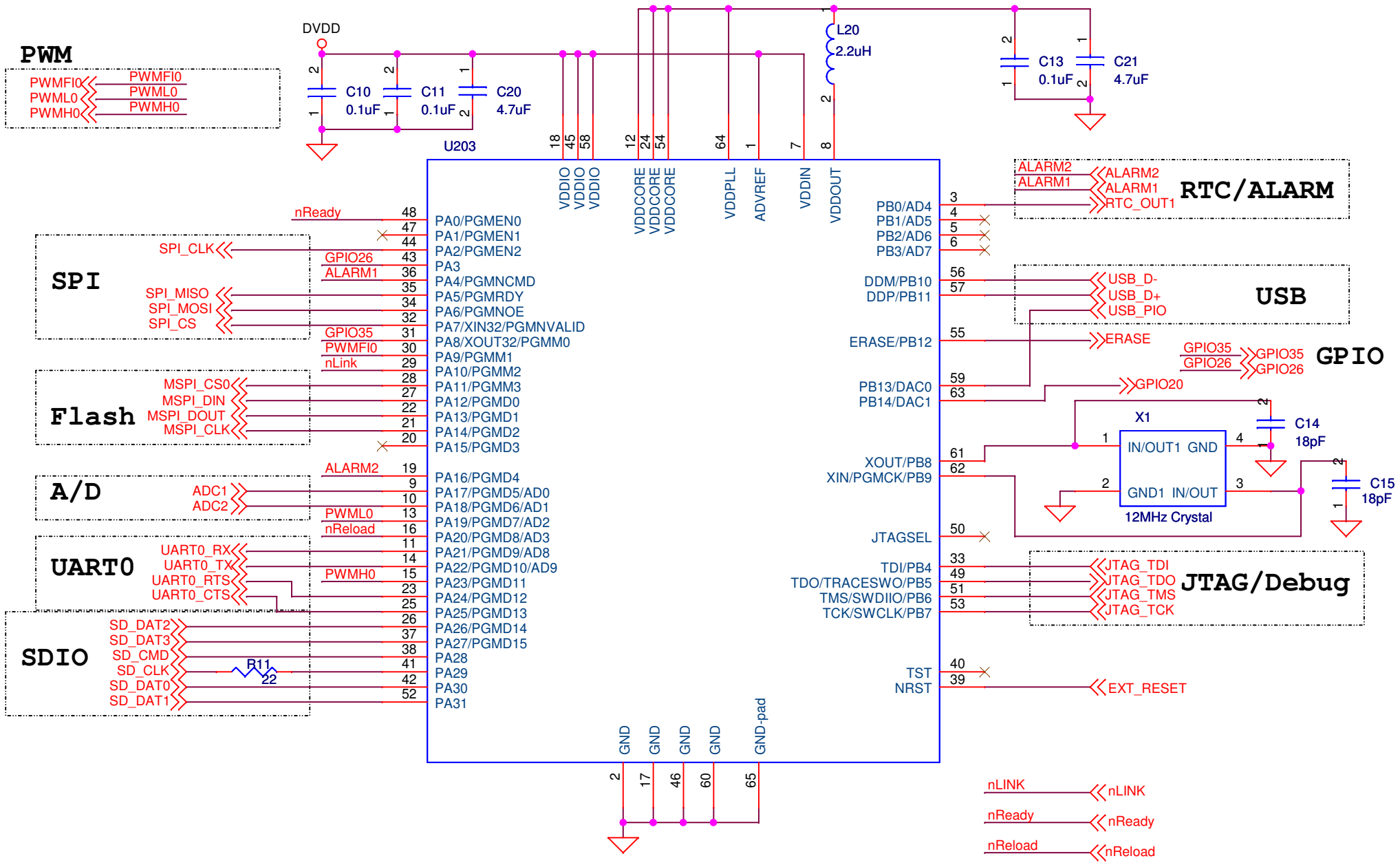

Title	High-Flying Atmel MCU	
Size A	Document Number HF-LPB SCH V1.1	Rev 1.1
Date: Monday, April 22, 2013	Sheet 1 of 3	

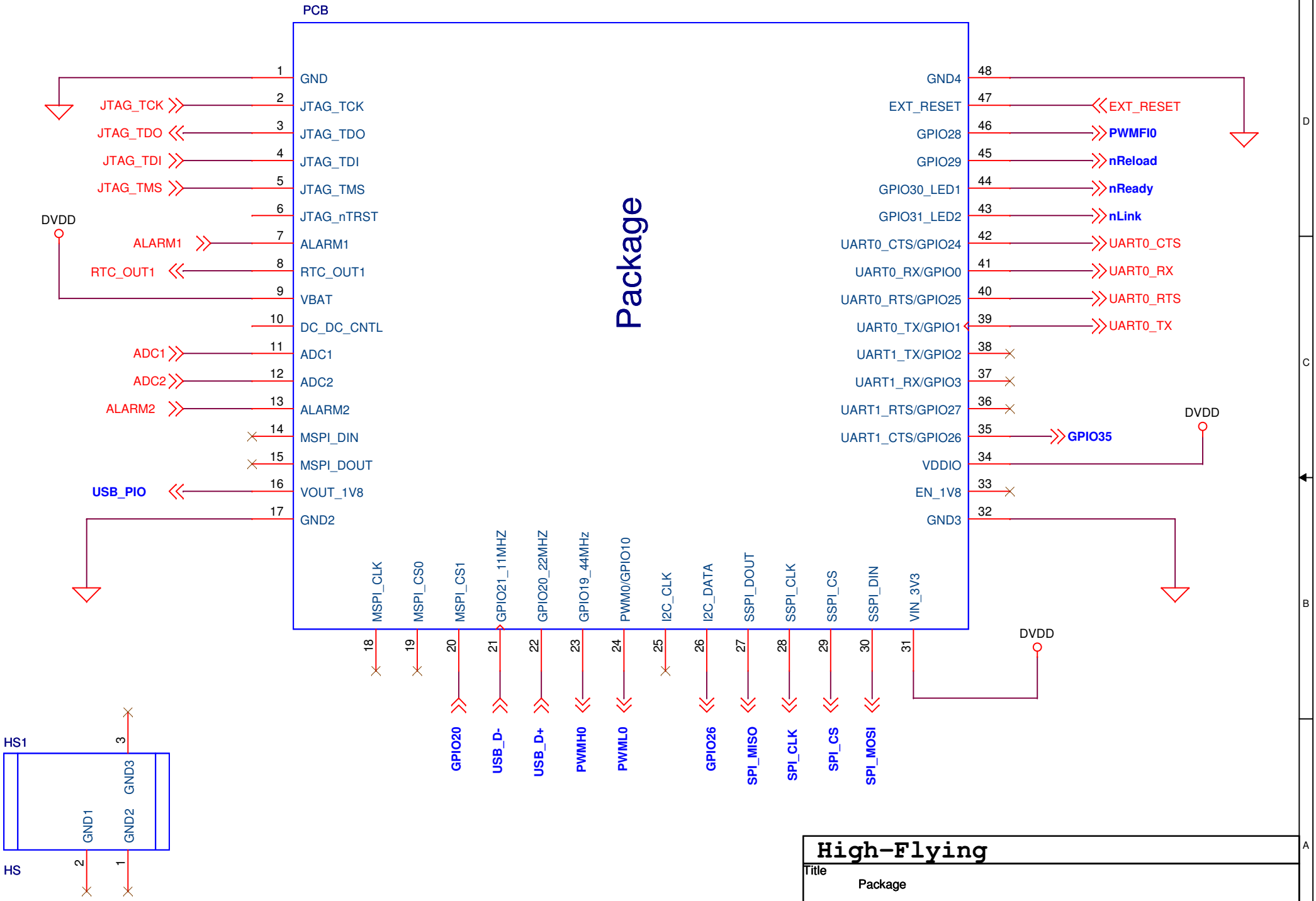

High-Flying		
Title: Package		
Size: A	Document Number: HF-LPB SCH V1.1	Rev: 1.1
Date: Monday, April 22, 2013	Sheet 1 of 3	

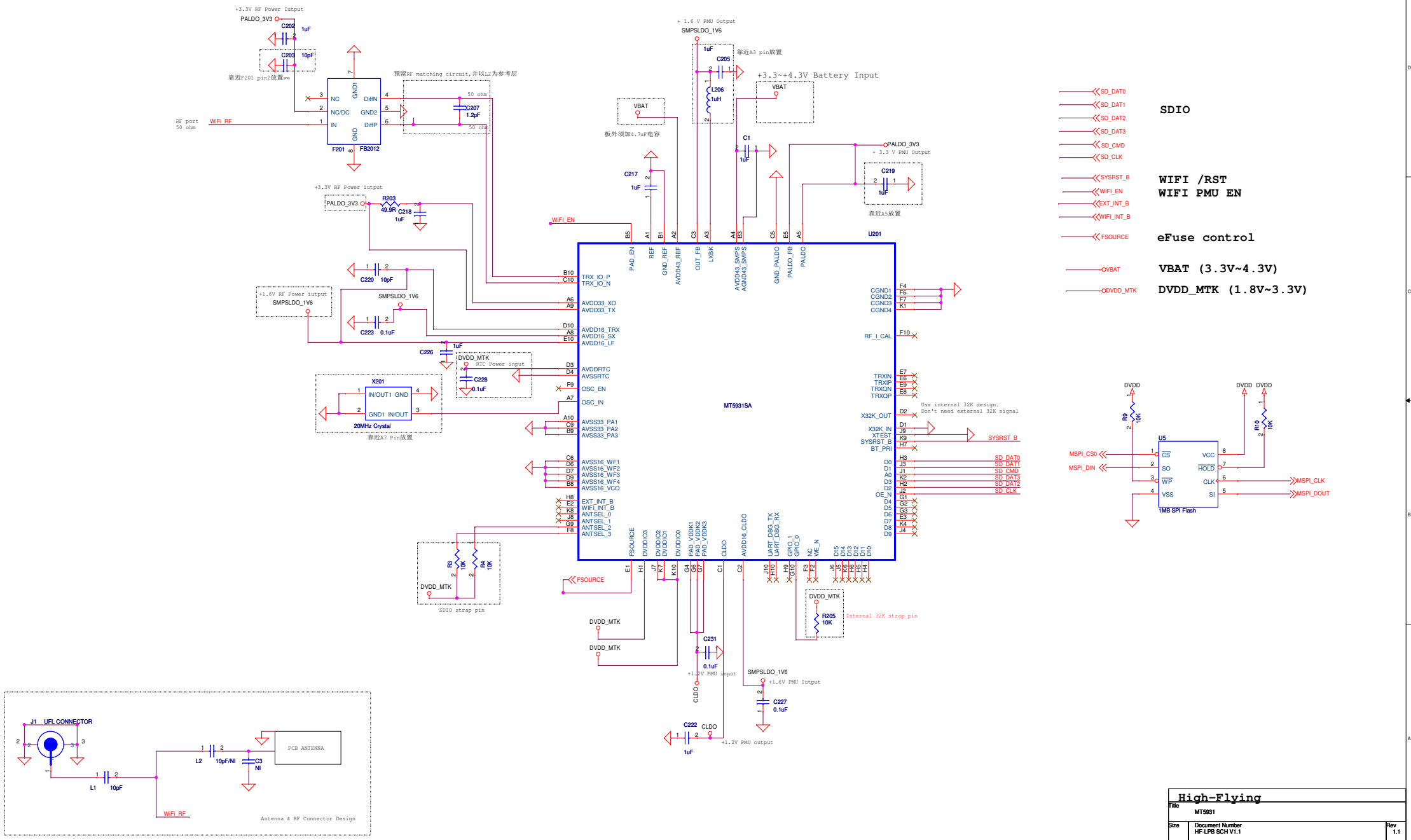
+3.3V RF Power Iutput
PALDO_3V3
C202 1uF
C203 10pF
靠近F201 pin2放置
F201 FB2012
NC
NC/DC
IN
GND1
DiffN
GND2
DiffP
GND
RF port
50 ohm
WiFi_RF
预留RF matching circuit,并以L2为参考层
50 ohm
C207 1.2pF
+ 1.6 V PMU Output
SMPSLDO_1V6
C205 1uF
靠近A3 pin放置
L206 1uH
+3.3~+4.3V Battery Input
VBAT
板外须加4.7uF电容
C1 1uF
PALDO_3V3
+ 3.3 V PMU Output
C219 1uF
靠近A5放置
C217 1uF
+3.3V RF Power iutput
R203 49.9R
C218 1uF
WIFI_EN
U201
MT5931SA
PAD_EN
REF
GND_REF
AVDD43_REF
OUT_FB
LXBK
AVDD43_SMPS
AGND43_SMPS
GND_PALDO
PALDO_FB
PALDO
TRX_IO_P
TRX_IO_N
AVDD33_XO
AVDD33_TX
AVDD16_TRX
AVDD16_SX
AVDD16_LF
AVDDRTC
AVSSRTC
OSC_EN
OSC_IN
AVSS33_PA1
AVSS33_PA2
AVSS33_PA3
AVSS16_WF1
AVSS16_WF2
AVSS16_WF3
AVSS16_WF4
AVSS16_VCO
EXT_INT_B
WIFI_INT_B
ANTSEL_0
ANTSEL_1
ANTSEL_2
ANTSEL_3
CGND1
CGND2
CGND3
CGND4
RF_I_CAL
TRXIN
TRXIP
TRXQN
TRXQP
X32K_OUT
X32K_IN
XTEST
SYSRST_B
BT_PRI
D0
D1
A0
D3
D2
OE_N
D4
D5
D6
D7
D8
D9
FSOURCE
DVDDIO3
DVDDIO2
DVDDIO1
DVDDIO0
PAD_VDDK1
PAD_VDDK2
PAD_VDDK3
CLDO
AVDD16_CLDO
UART_DBG_TX
UART_DBG_RX
GPIO_1
GPIO_0
NC
WE_N
D15
D14
D13
D12
D11
D10
+1.6V RF Power iutput
SMPSLDO_1V6
C220 10pF
C223 0.1uF
C226 1uF
DVDD_MTK
RTC Power input
C228 0.1uF
X201
IN/OUT1 GND
GND1 IN/OUT
20MHz Crystal
靠近A7 Pin放置
Use internal 32K design.
Don't need external 32K signal
SYSRST_B
SD_DAT0
SD_DAT1
SD_DAT3
SD_DAT2
SD_CLK
R3 10K
R4 10K
SDIO strap pin
FSOURCE
DVDD_MTK
R205 10K
Internal 32K strap pin
C231 0.1uF
+1.2V PMU input
SMPSLDO_1V6
+1.6V PMU Iutput
C227 0.1uF
C222 1uF
CLDO
+1.2V PMU output
SD_DAT0
SD_DAT1
SD_DAT2
SD_DAT3
SD_CMD
SD_CLK
SDIO
SYSRST_B
WIFI_EN
WIFI /RST
WIFI PMU EN
EXT_INT_B
WIFI_INT_B
FSOURCE
eFuse control
VBAT
VBAT (3.3V~4.3V)
DVDD_MTK
DVDD_MTK (1.8V~3.3V)
DVDD
R9 10K
R10 10K
U5
CS
SO
WP
VSS
VCC
HOLD
CLK
SI
1MB SPI Flash
MSPI_CS0
MSPI_DIN
MSPI_CLK
MSPI_DOUT
J1 UFL CONNECTOR
L1 10pF
L2 10pF/NI
C3 NI
PCB ANTENNA
WiFi_RF
Antenna & RF Connector Design
High-Flying
Title
MT5931
Size
Document Number
HF-LPB SCH V1.1
Rev
1.1
Date: Monday, April 22, 2013
Sheet 2 of 3