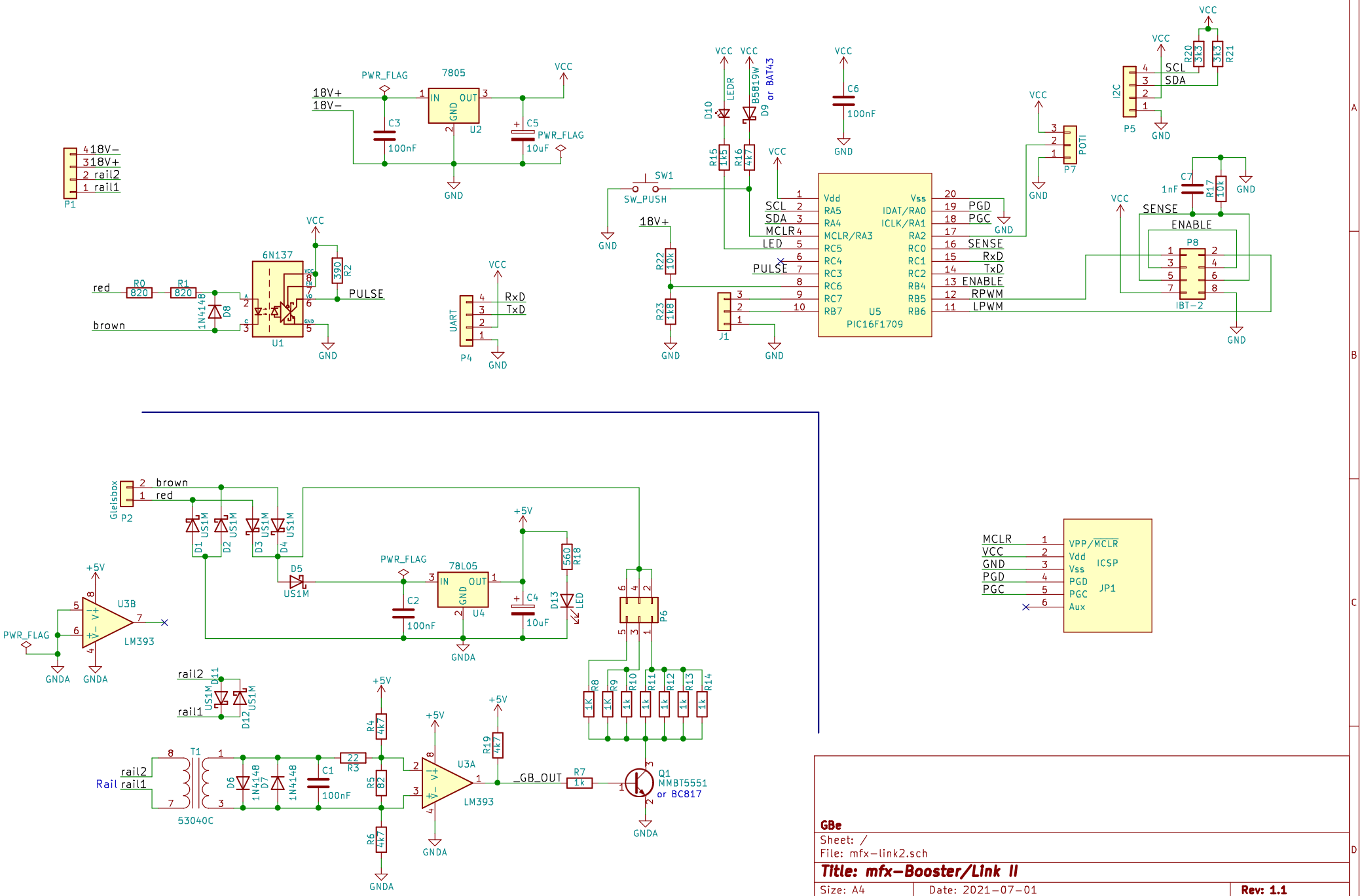

GBe

Sheet: /

File: mfx−link2.sch

Title: mfx−Booster/Link II

Size: A4	Date: 2021−07−01	**Rev: 1.1**
KiCad E.D.A. kicad 5.1.10−88a1d61d5889ubuntu20.04.1		Id: 1/1