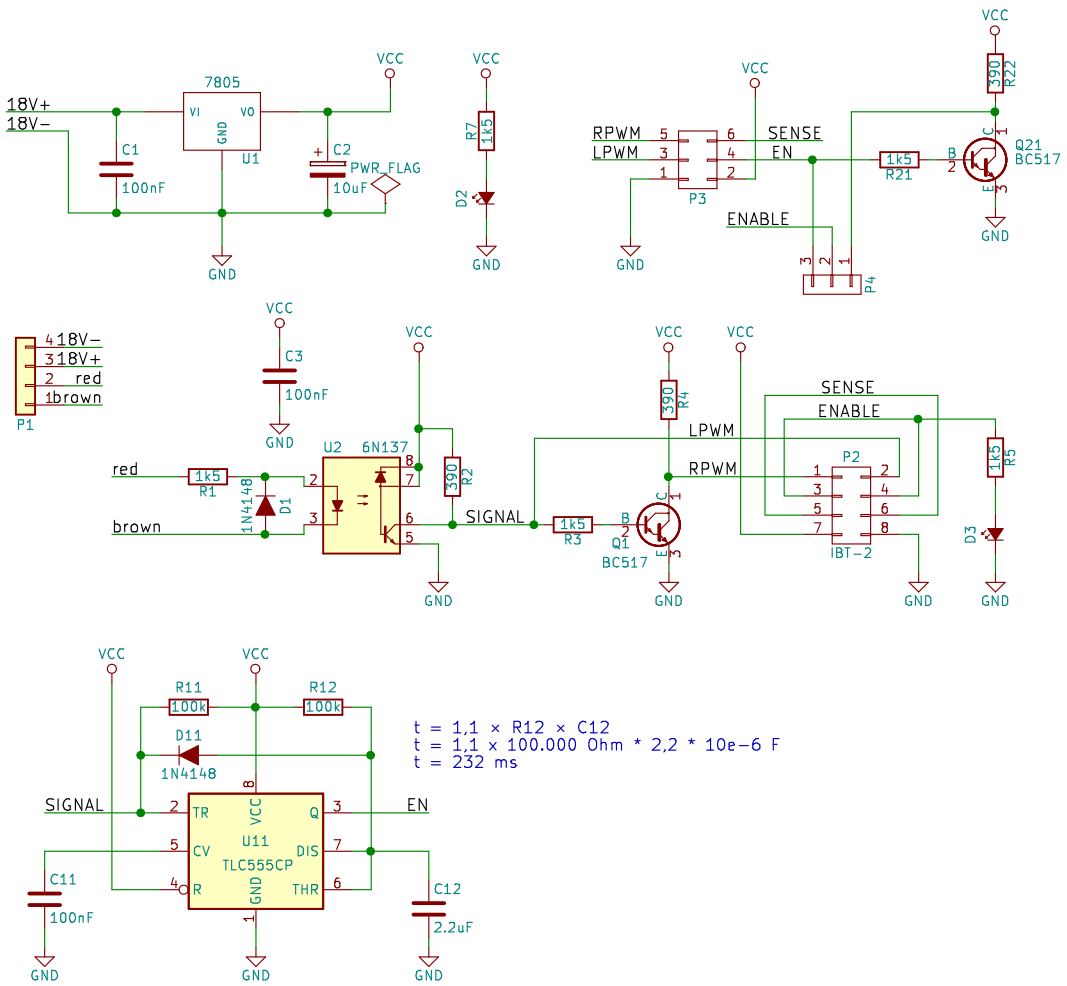

GBe

Sheet: /

File: booster−link.sch

Title: IBT−2 Booster

Size: A4	Date: 2018−07−24	**Rev: 0.1**
KiCad E.D.A. kicad 4.0.2+dfsg1−stable		Id: 1/1