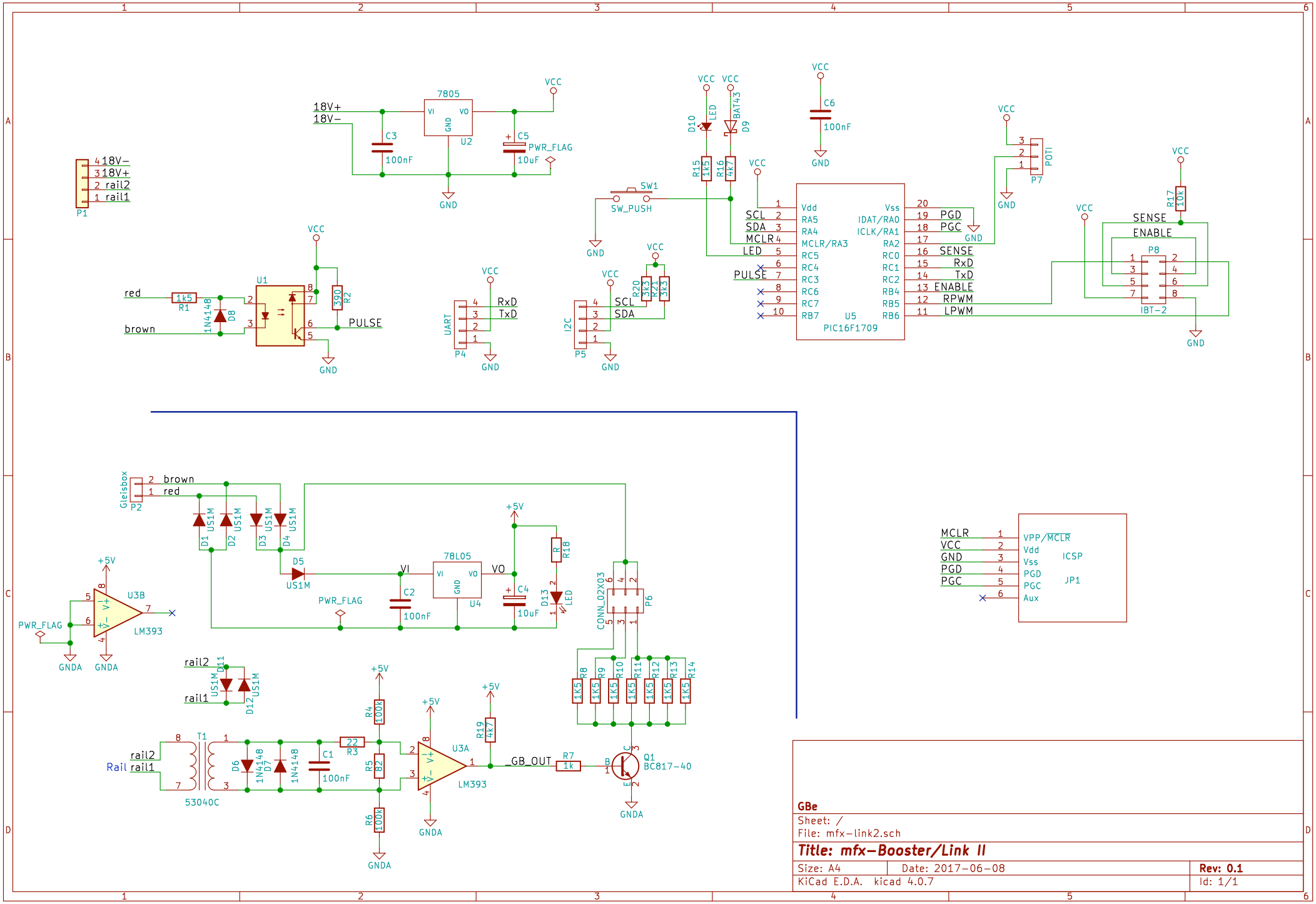
P1
4 18V−
3 18V+
2 rail2
1 rail1
18V+
18V−
7805
VI
VO
GND
U2
C3
100nF
C5
10uF
PWR_FLAG
VCC
GND
red
brown
1k5
R1
1N4148
D8
U1
390
R2
PULSE
UART
P4
RxD
TxD
I2C
P5
SCL
SDA
R20
3k3
R21
3k3
SW1
SW_PUSH
D10
LED
BAT43
D9
R15
1k5
R16
4k7
C6
100nF
PIC16F1709
U5
Vdd
RA5
RA4
MCLR/RA3
RC5
RC4
RC3
RC6
RC7
RB7
Vss
IDAT/RA0
ICLK/RA1
RA2
RC0
RC1
RC2
RB4
RB5
RB6
PGD
PGC
SENSE
RxD
TxD
ENABLE
RPWM
LPWM
POTI
P7
R17
10k
P8
IBT−2
Gleisbox
P2
D1
US1M
D2
D3
D4
D5
+5V
78L05
U4
C2
C4
R
R18
D13
U3B
LM393
GNDA
CONN_02X03
P6
R8
R9
R10
R11
R12
R13
R14
1K5
rail2
rail1
D11
D12
T1
53040C
Rail
D6
D7
C1
22
R3
R4
100k
R5
82
R6
U3A
R19
4k7
_GB_OUT
R7
1k
Q1
BC817−40
MCLR
VCC
GND
PGD
PGC
VPP/MCLR
Vdd
Vss
PGD
PGC
Aux
ICSP
JP1
GBe
Sheet: /
File: mfx−link2.sch
Title: mfx−Booster/Link II
Size: A4
Date: 2017−06−08
Rev: 0.1
KiCad E.D.A. kicad 4.0.7
Id: 1/1