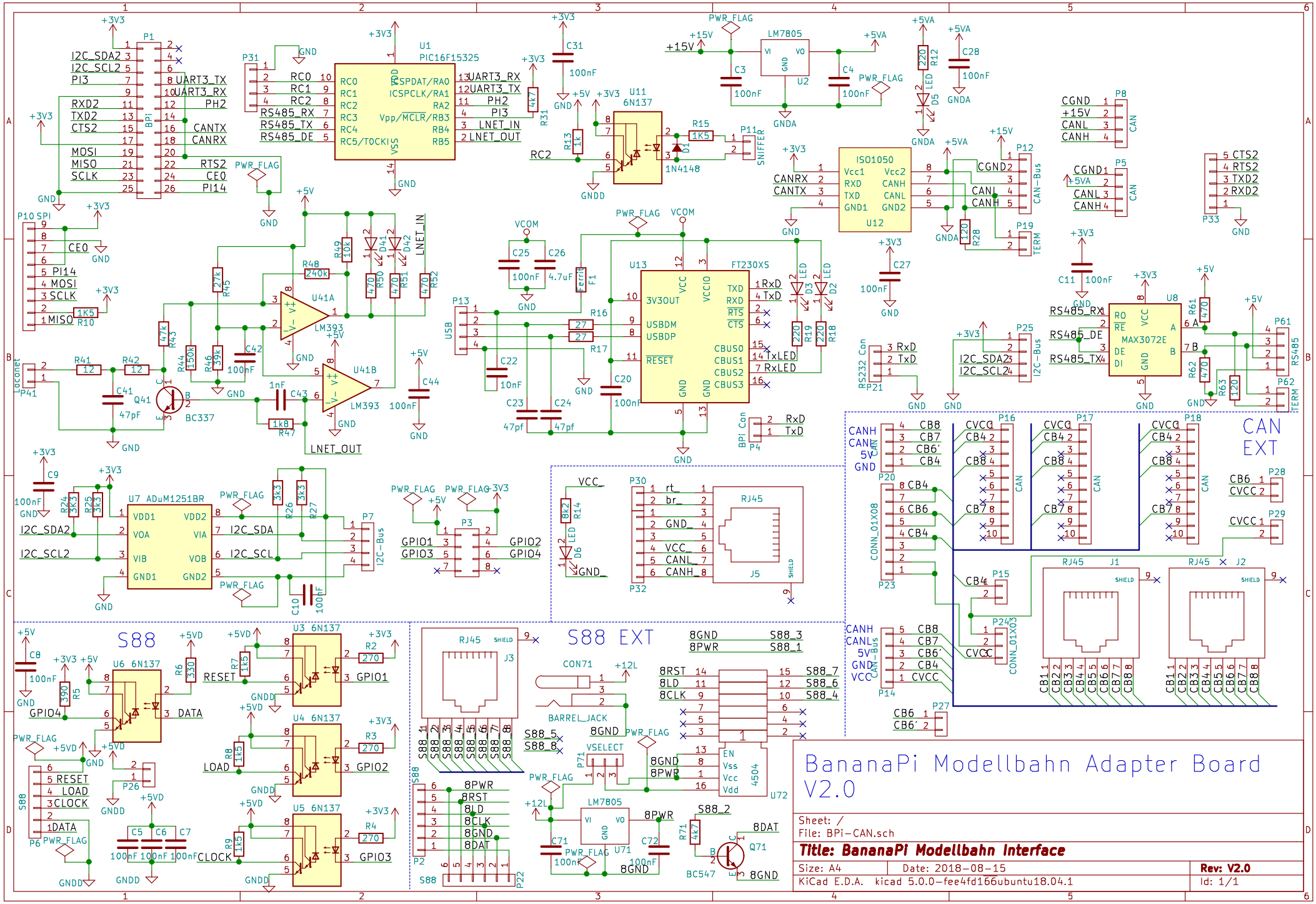
BananaPi Modellbahn Adapter Board V2.0
Sheet: /
File: BPi-CAN.sch
Title: BananaPi Modellbahn Interface
Size: A4
Date: 2018-08-15
Rev: V2.0
KiCad E.D.A. kicad 5.0.0-fee4fd166ubuntu18.04.1
Id: 1/1
U1 PIC16F15325
U11 6N137
U12 ISO1050
U13 FT230XS
U41A LM393
U41B LM393
U7 ADuM1251BR
U6 6N137
U3 6N137
U4 6N137
U5 6N137
U72 4504
U71 LM7805
LM7805
S88
S88 EXT
CAN EXT
CAN-Bus
I2C-Bus
RS485
TERM
SNIFFER
LNET_IN
LNET_OUT
RJ45
J5
J1
J2
J3
P2
P6
P7
P8
P5
P12
P19
P11
P13
P21
P25
P61
P62
P33
P4
P3
P30
P32
P20
P23
P14
P15
P16
P17
P18
P24
P28
P29
P27
P26
P22
P31
P1
P10 SPI
P41
Loconet
BC337
BC547
Q41
Q71
D1 1N4148
D2 LED
D3 LED
D5 LED
D6 LED
F1 Ferrit
CON71
BARREL_JACK
VSELECT
P71
CON_01X08
CONN_01X03
RS232 Con
BPi Con
I2C_SDA2
I2C_SCL2
PI3
UART3_TX
UART3_RX
PH2
RXD2
TXD2
CTS2
CANTX
CANRX
MOSI
MISO
SCLK
RTS2
CE0
PI14
RC0
RC1
RC2
RC3
RC4
RC5/TOCKI
RS485_RX
RS485_TX
RS485_DE
LNET_IN
LNET_OUT
CGND
+15V
CANL
CANH
CTS2
RTS2
TXD2
RXD2
RS485_RX
RS485_DE
RS485_TX
RxD
TxD
RxD
TxD
RxD
TxD
RxD
TxD
RxD
TxD
RxD
TxD
VCC_
GND_
rt_
br_
GND_
VCC_
CANL_
CANH_
CANH
CANL
5V
GND
VCC
CB8
CB7
CB6´
CB4
CVCC
CB6
CB6´
CVCC
CB1
CB2
CB3
CB4
CB5
CB6
CB7
CB8
GPIO1
GPIO2
GPIO3
GPIO4
RESET
LOAD
CLOCK
DATA
8GND
8PWR
8RST
8LD
8CLK
8DAT
S88_1
S88_2
S88_3
S88_4
S88_5
S88_6
S88_7
S88_8
+3V3
+5V
+5VD
+5VA
+15V
+12L
GND
GNDD
GNDA
PWR_FLAG
VCOM
C31 100nF
C28 100nF
C3 100nF
C4 100nF
C11 100nF
C27 100nF
C9 100nF
C8 100nF
C41 47pF
C42 100nF
C43 1nF
C44 100nF
C22 10nF
C23 47pF
C24 47pF
C20 100nF
C25 100nF
C26 4.7uF
C10 100nF
C5 100nF
C6 100nF
C7 100nF
C71 100nF
C72 100nF
R10 1k5
R13 1k
R15 1k5
R31 4k7
R12 220
R28 120
R19 220
R18 220
R16 27
R17 27
R14 8k2
R61 470
R62 470
R63 120
R41 12
R42 12
R47 1k8
R48 240k
R49 10k
R50 470
R51 470
R52 470
R45 27k
R43 47k
R44 150k
R46 39k
R24 3k3
R25 3k3
R26 3k3
R27 3k3
R5 390
R6 330
R7 1k5
R8 1k5
R9 1k5
R2 270
R3 270
R4 270
R71 4k7