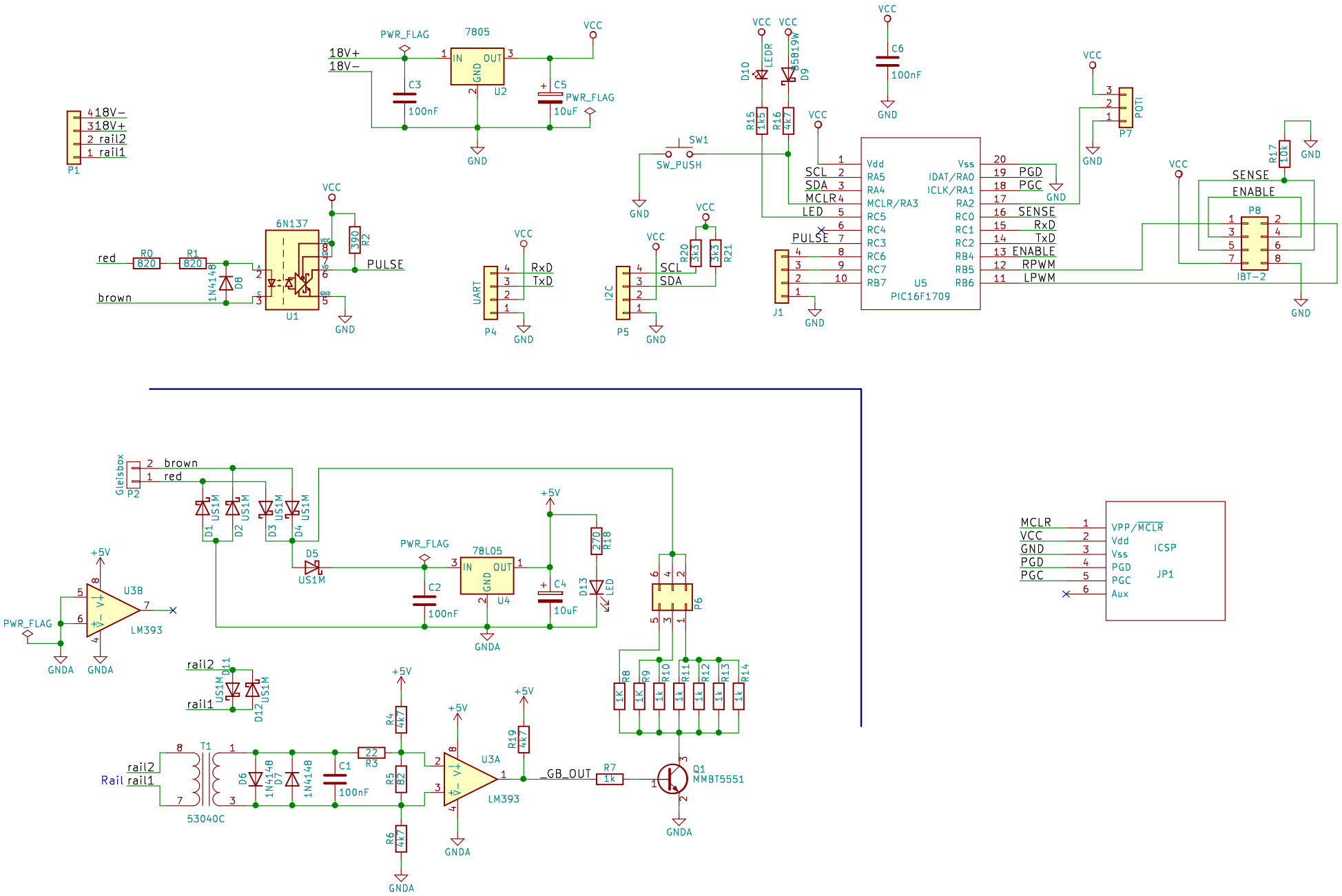
P1
418V−
318V+
2 rail2
1 rail1
18V+
18V−
PWR_FLAG
7805
IN
OUT
GND
U2
C3
100nF
C5
10uF
VCC
GND
6N137
U1
R0
820
R1
820
1N4148
D8
R2
390
red
brown
PULSE
UART
P4
RxD
TxD
I2C
P5
SCL
SDA
R20
3k3
R21
3k3
D10
LEDR
D9
1N5819W
R15
1k5
R16
4k7
SW1
SW_PUSH
C6
100nF
Vdd
RA5
RA4
MCLR/RA3
RC5
RC4
RC3
RC6
RC7
RB7
Vss
IDAT/RA0
ICLK/RA1
RA2
RC0
RC1
RC2
RB4
RB5
RB6
U5
PIC16F1709
PGD
PGC
SENSE
RxD
TxD
ENABLE
RPWM
LPWM
J1
POTI
P7
R17
10k
P8
IBT−2
Glelsbox
P2
brown
red
US1M
D1
D2
D3
D4
D5
78L05
U4
C2
100nF
C4
10uF
+5V
R18
270
D13
LED
U3B
LM393
GNDA
rail2
rail1
D11
D12
T1
53040C
Rail
D6
D7
1N4148
C1
100nF
R3
22
R4
4k7
R5
82
R6
4k7
U3A
R19
4k7
_GB_OUT
R7
1k
Q1
MMBT5551
P6
R8
R9
R10
R11
R12
R13
R14
1K
1k
MCLR
VCC
GND
PGD
PGC
VPP/MCLR
Vdd
Vss
PGD
PGC
Aux
ICSP
JP1