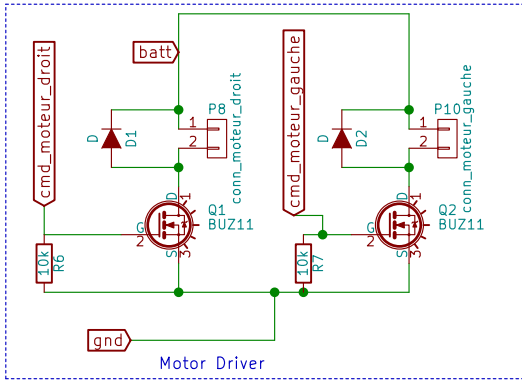

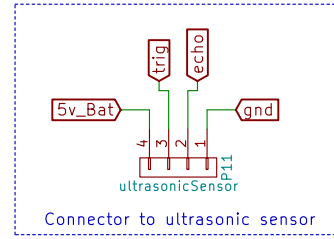

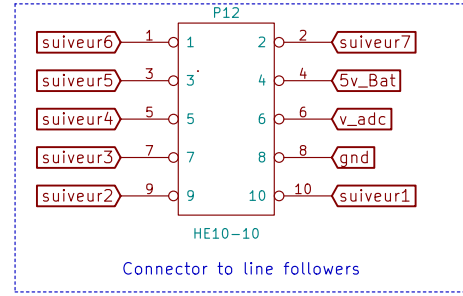

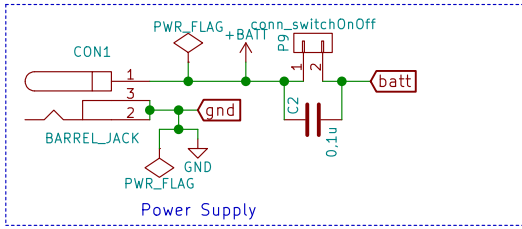

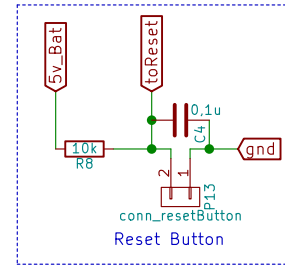

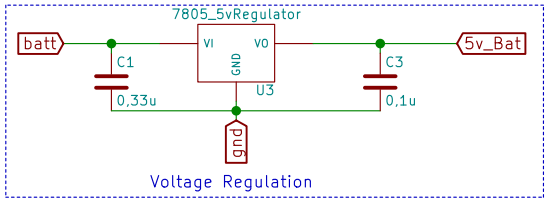

Sheet: /Sous Composants/
File: subComponents.sch

Title: Sous composants

Size: User	Date: 2016-06-09	Rev:
KiCad E.D.A. kicad 4.0.2+dfsg1-stable		Id: 2/2