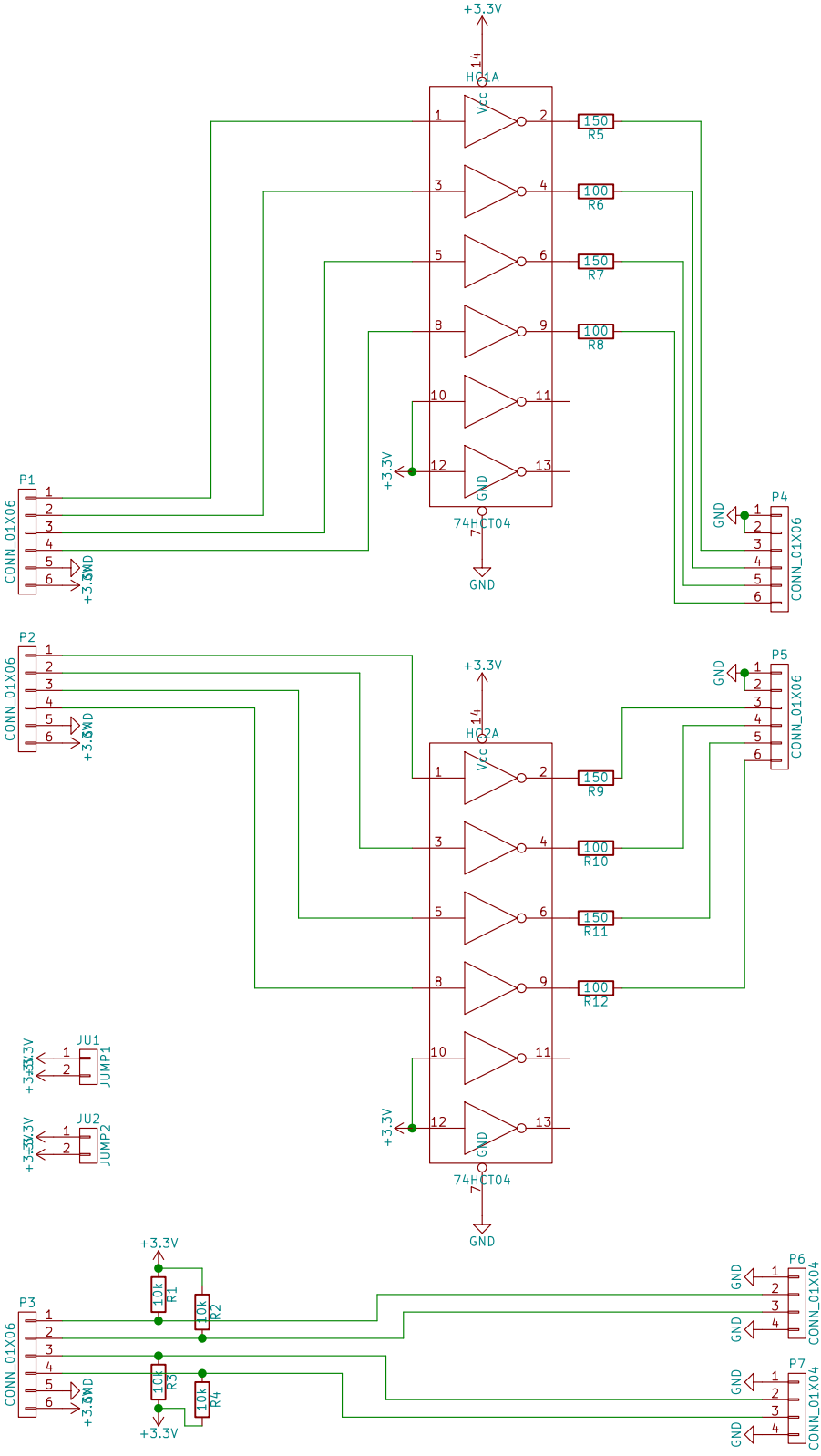

IPSA

Sheet: /

File: circuit.sch

Title: Carte Circuit

Size: User	Date: 2016-06-15	**Rev: 1.1**
KiCad E.D.A. kicad 4.0.2+dfsg1-stable		Id: 1/1