REVISION RECORD			
Version	Contents	APPROVED:	DATE:
A	First Release	JG.Shen	Aug.16.2021

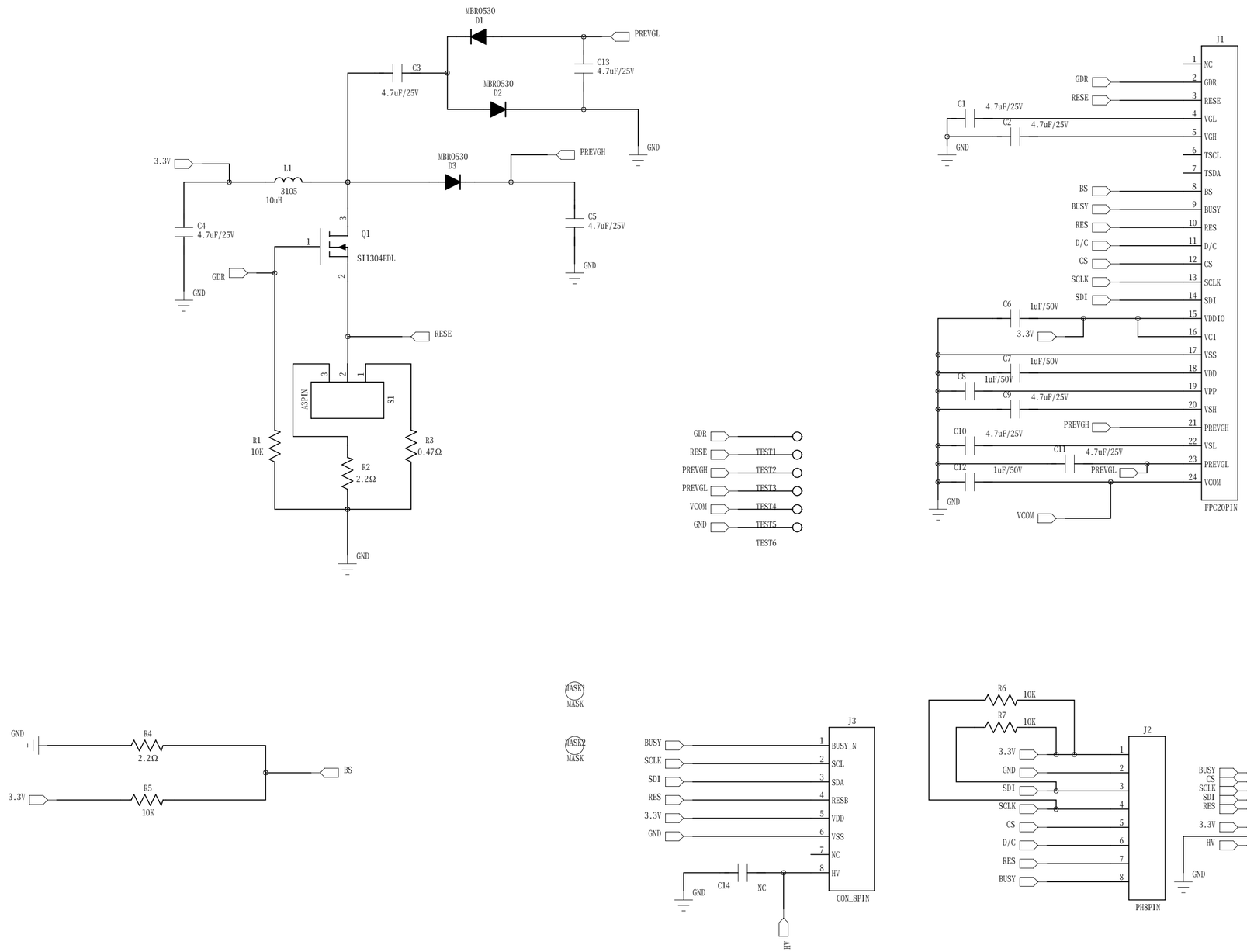

These drawings and specifications are the exclusive property of SID.are furnished for evaluation only on a confidential basis,and shall not be disclosed,copied,or otherwise used for any purpose whatsoever except with the prior written consent of SID.

Guangdong SID Technology Co.,Ltd.			
PRODUCT No:	SESTM32C01-A		
Assemblage No:			
DRAWN: JG.Shen	DATED: AUG.20.2021	DRAWING NO: /	
CHECKED:		SHEET: 1 OF 1	REV:
APPROVED:		File	A