REVISION RECORD			
Version	Contents	APPROVED:	DATE:
A	First Release	NAME	Aug.18,2015

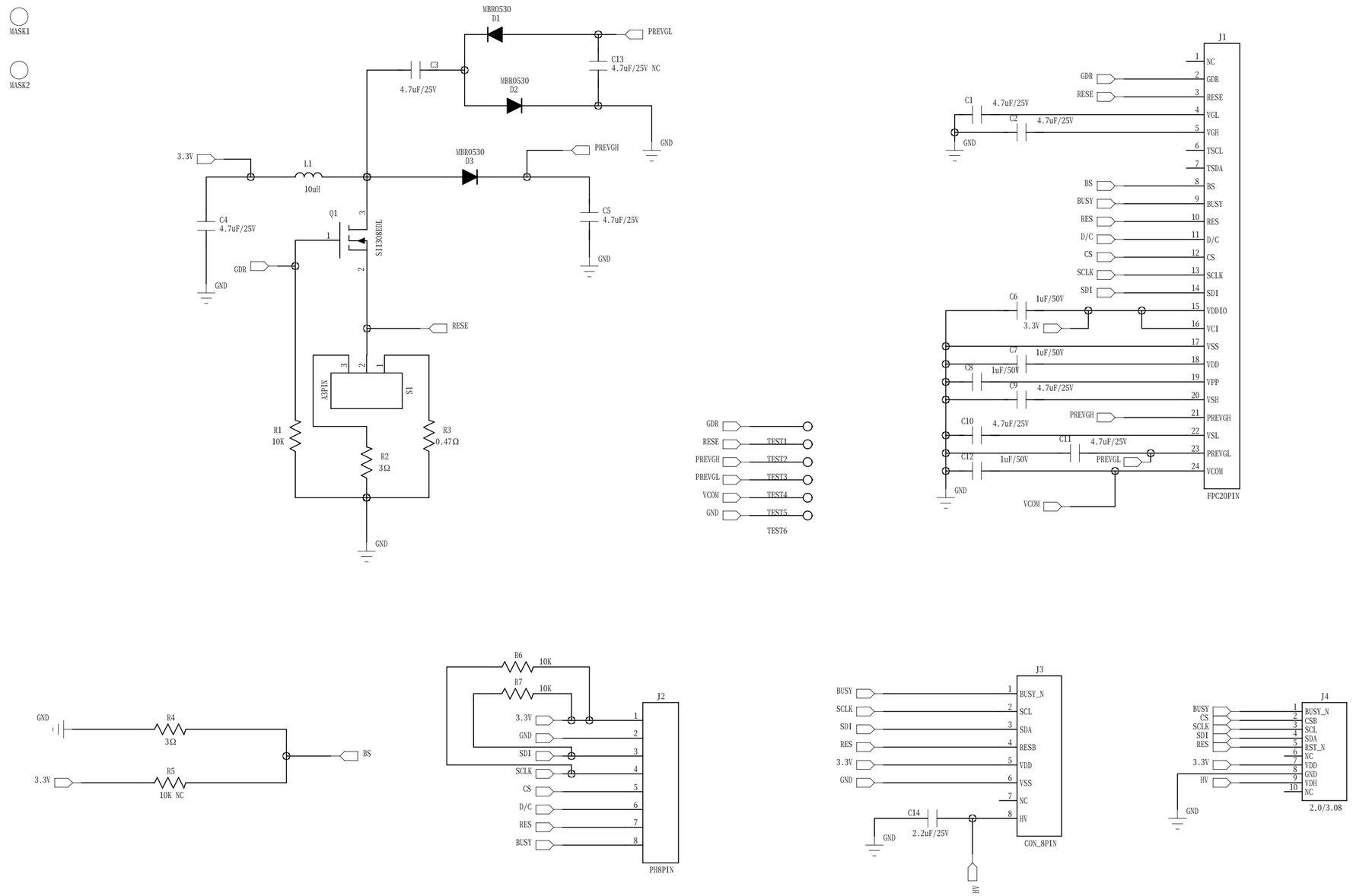

Guangdong SID Technology Co.,Ltd.		
PRODUCT No: ST0308Z01-FPCA-A		
Assemblage No:		
DRAWN:	DATED:	DRAWING NO: /
CHECKED:		SHEET: 1 OF 1
APPROVED:		File
		REV: A

These drawings and specifications are the exclusive property of SID.are furnished for evaluation only on a confidential basis,and shall not be disclosed,copied,or otherwise used for any purpose whatsoever except with the prior written consent of SID.