MIPS_system.v

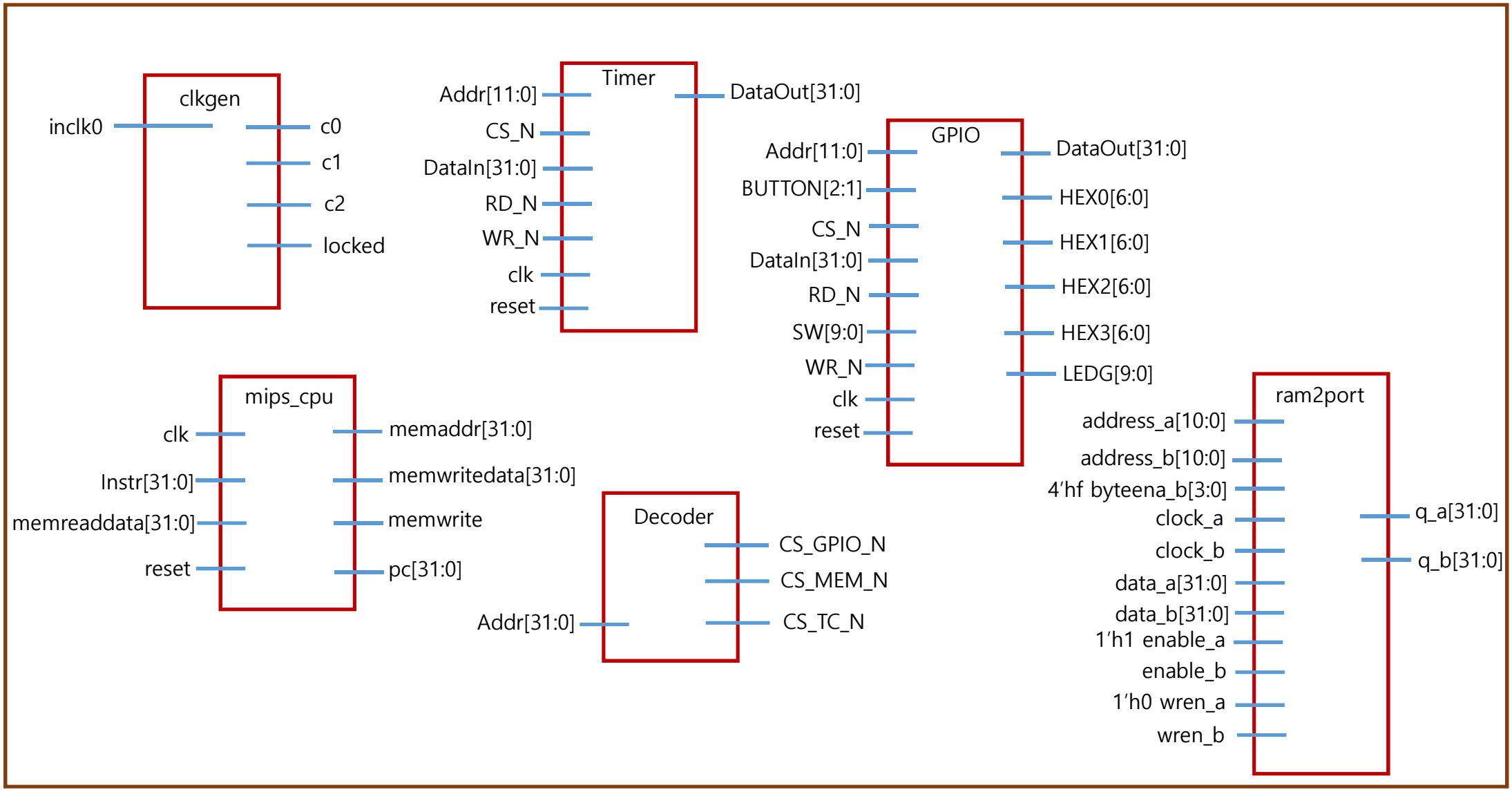

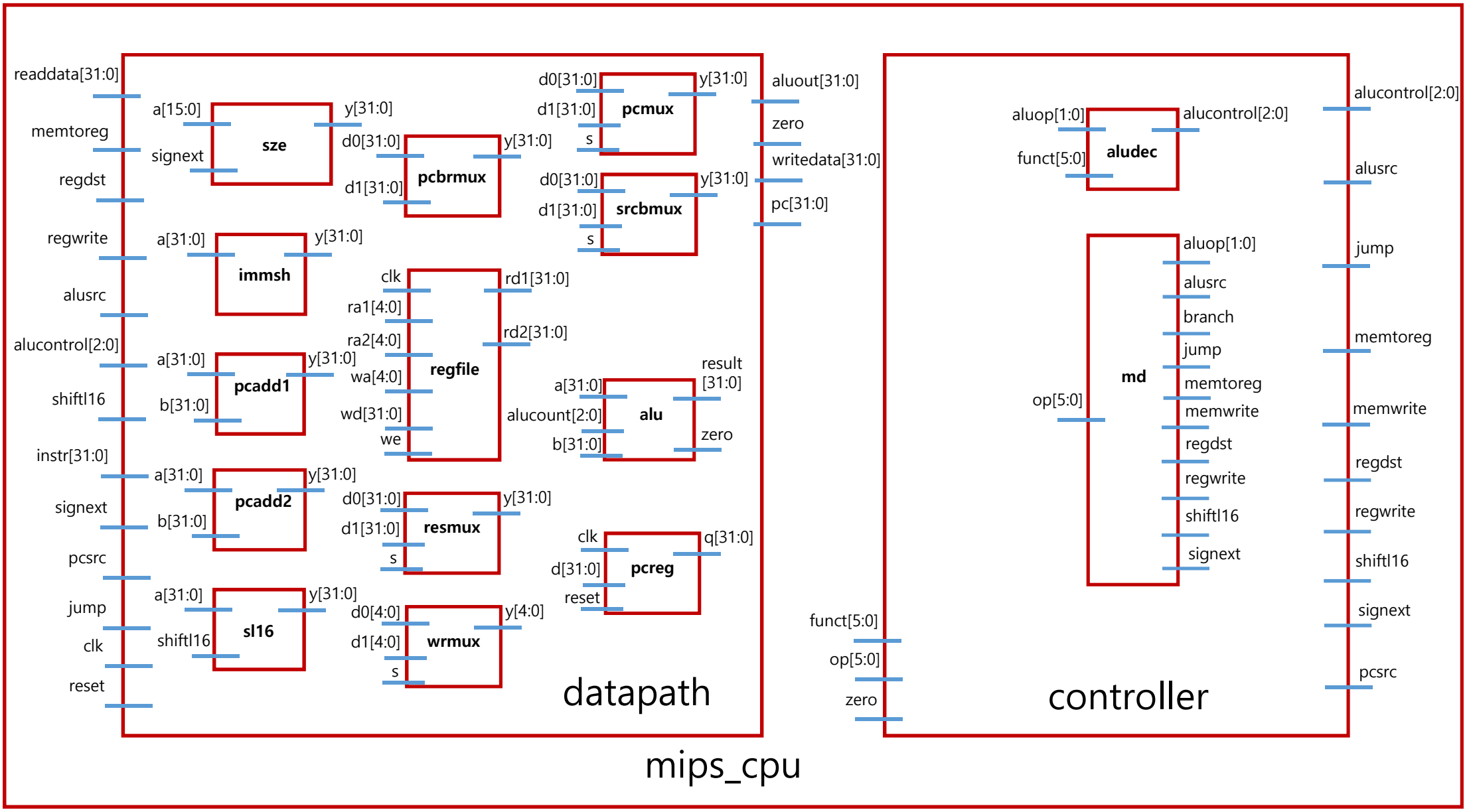
mips_cpu
datapath
controller
readdata[31:0]
memtoreg
regdst
regwrite
alusrc
alucontrol[2:0]
shiftl16
instr[31:0]
signext
pcsrc
jump
clk
reset
sze
a[15:0]
signext
y[31:0]
immsh
a[31:0]
y[31:0]
pcadd1
a[31:0]
b[31:0]
y[31:0]
pcadd2
a[31:0]
b[31:0]
y[31:0]
sl16
a[31:0]
shiftl16
y[31:0]
pcbrmux
d0[31:0]
d1[31:0]
y[31:0]
regfile
clk
ra1[4:0]
ra2[4:0]
wa[4:0]
wd[31:0]
we
rd1[31:0]
rd2[31:0]
resmux
d0[31:0]
d1[31:0]
s
y[31:0]
wrmux
d0[4:0]
d1[4:0]
s
y[4:0]
pcmux
d0[31:0]
d1[31:0]
s
y[31:0]
srcbmux
d0[31:0]
d1[31:0]
s
y[31:0]
alu
a[31:0]
alucount[2:0]
b[31:0]
result [31:0]
zero
pcreg
clk
d[31:0]
reset
q[31:0]
aluout[31:0]
zero
writedata[31:0]
pc[31:0]
funct[5:0]
op[5:0]
zero
aludec
aluop[1:0]
funct[5:0]
alucontrol[2:0]
md
op[5:0]
aluop[1:0]
alusrc
branch
jump
memtoreg
memwrite
regdst
regwrite
shiftl16
signext
alucontrol[2:0]
alusrc
jump
memtoreg
memwrite
regdst
regwrite
shiftl16
signext
pcsrc