Introduction to Applied Machine Learning

14: Text-to-Image and Guided Diffusion

🎓 Machine Learning Adventure 🚀

1. 🤖 Introduction to Machine Learning
2. 🧠 Artificial Neural Networks and Computer Vision
3. 🔤 Transformers and Language Models
4. 🎨 GANs and Diffusion for Image Generation
5. 🎮 Reinforcement Learning and Behavior
6. 🏆 Final Projects

Text to Image Generation

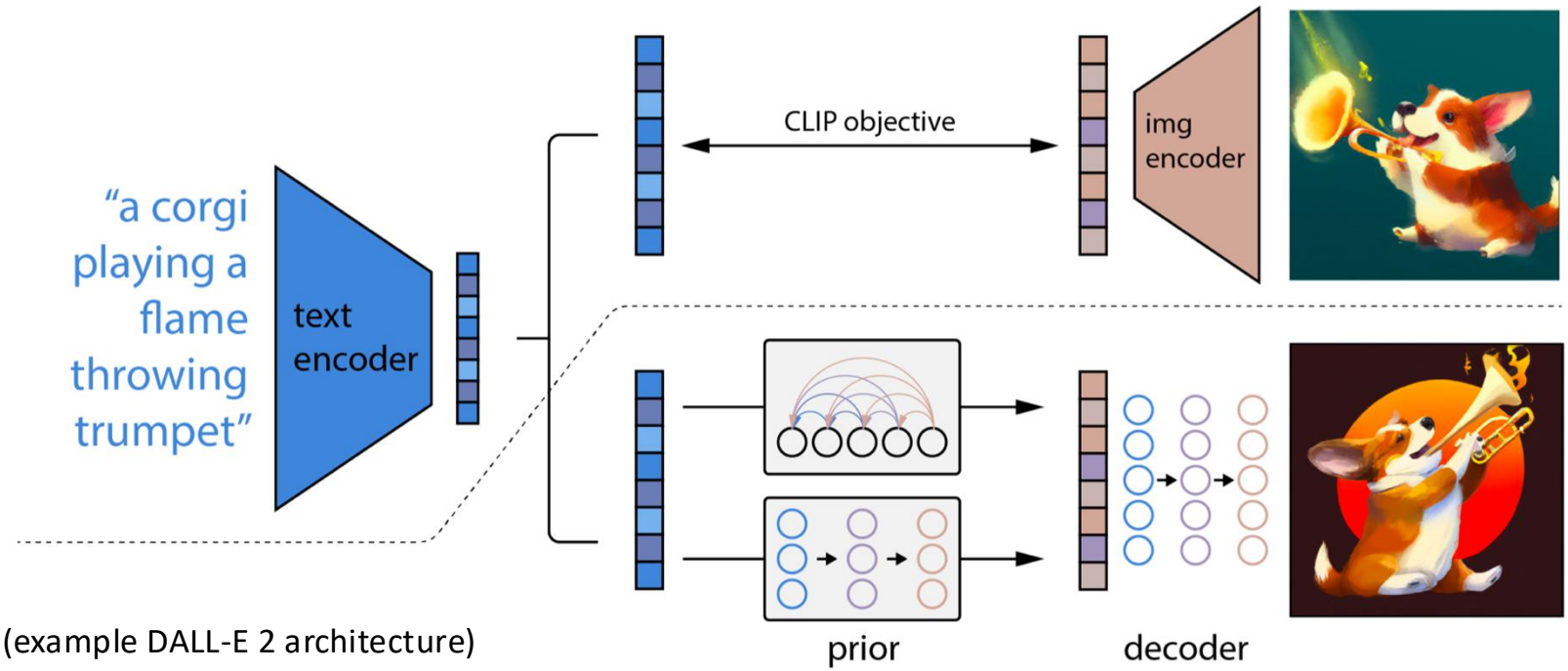

(example DALL-E 2 architecture)

How can we **condition** and **guide** a generative diffusion model given a **text input**?

Conditioned Generation

- Recall that our generative diffusion model had the form $\boldsymbol{g_w}(\boldsymbol{z}_t, t)$ where:
  - $\boldsymbol{z}_t$ is the noisy image,
  - At timestep t,
  - And $\boldsymbol{w}$ are the weights of a UNet:

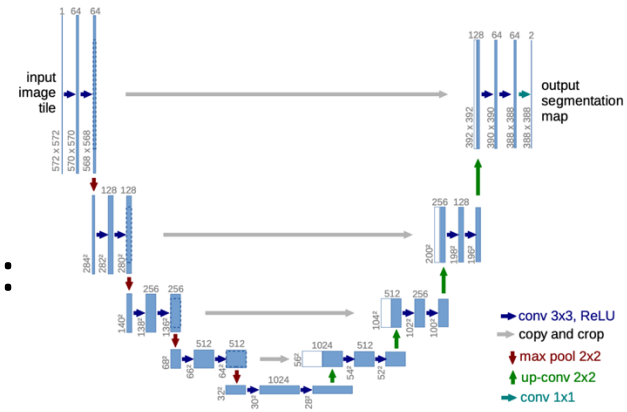

- Now we want the model to also take a context vector of text as input (e.g., "a corgi playing a trumpet")
  - $\boldsymbol{g_w}(\boldsymbol{z}_t, t) \rightarrow \boldsymbol{g_w}(\boldsymbol{z}_t, t, \boldsymbol{c})$
  - Where $\boldsymbol{c}$ is some embedding of the input text
    - How to get the embedding $\boldsymbol{c}$?
    - How to add $\boldsymbol{c}$ to the UNet architecture?

Encoding Text Input

- Use the **text encoder** of a text-image contrastively trained encoder Transformer (like CLIP!)
  - "a corgi" → CLIP → $\boldsymbol{c}$

- Naïve approach: Concatenate $\boldsymbol{c}$ to image $\boldsymbol{z}_t$ and pass to model (additional channels in UNet input). Or…

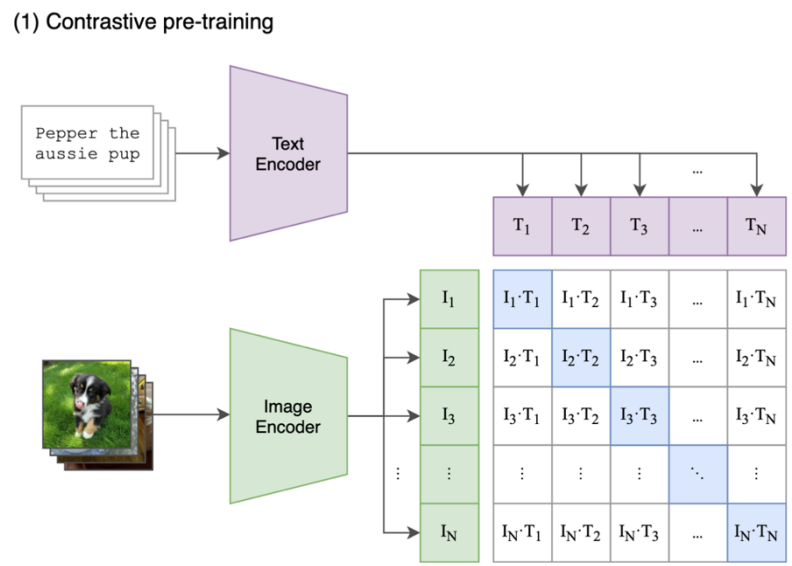

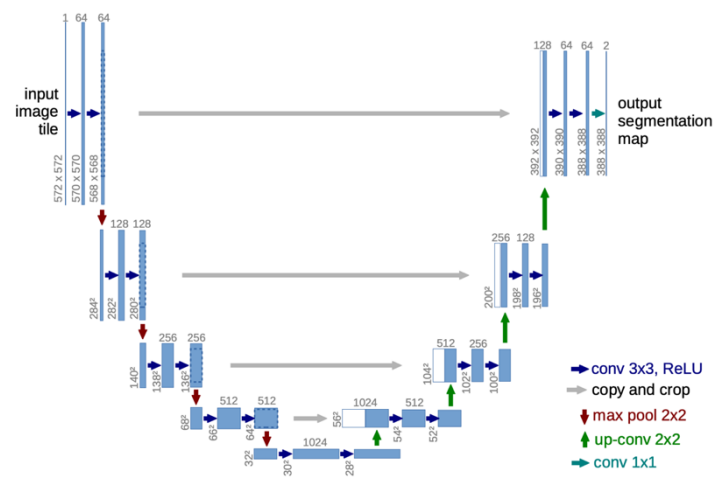

Full Encoder-Decoder Architecture

The grayed boxes are stacked N times (6 in the original paper).

The **Encoder is CLIP**: the text encoder contrastively trained.

The denoising diffusion model (the **UNet**) acts as the "**decoder**" – generating a new image.

We want each step of the decoder (UNet) to pay **attention** to the **contextual embedding** (of the **input text**).

Can adapt the **cross-attention mechanism** from the Transformer.

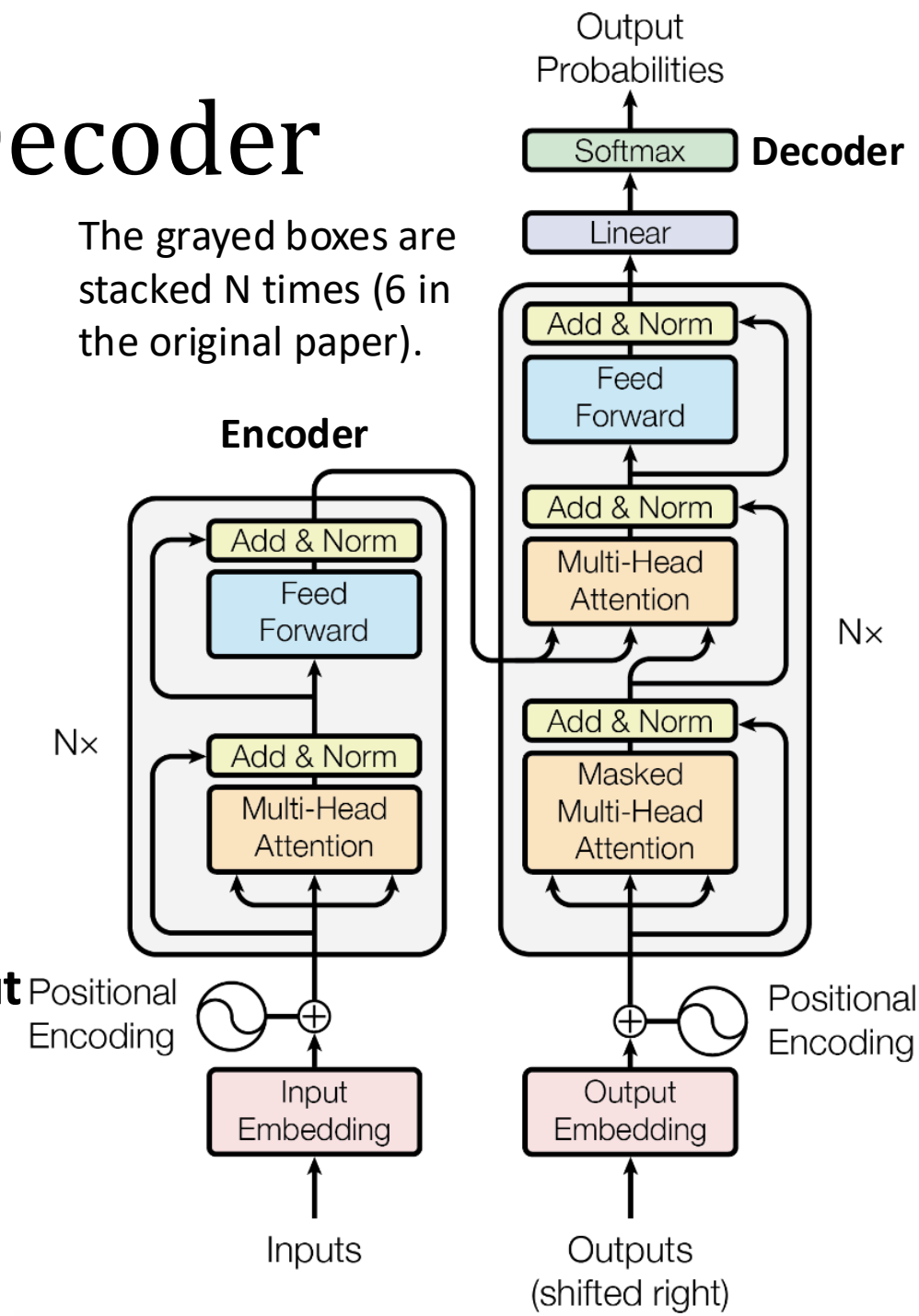

Cross-Attention Mechanism

- Query matrix $\mathbf{Q} := \mathbf{X}'\mathbf{W}^{(q)}$
- Key matrix $\mathbf{K} := \mathbf{Z}\mathbf{W}^{(k)}$
- Value matrix $\mathbf{V} := \mathbf{Z}\mathbf{W}^{(v)}$

Where:

- $\mathbf{Z}$ is the last representation of the encoder stack.
- $\mathbf{X}'$ is the output of the masked multi-head self-attention.

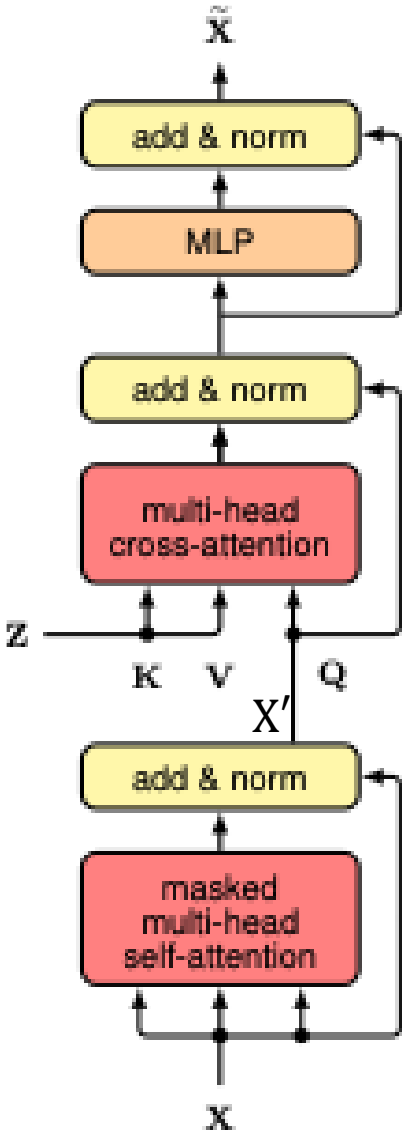

Example: Cross-Attention in Stable Diffusion

Cross-attention in the denoising UNet improves over simply concatenating the text embedding to the input.

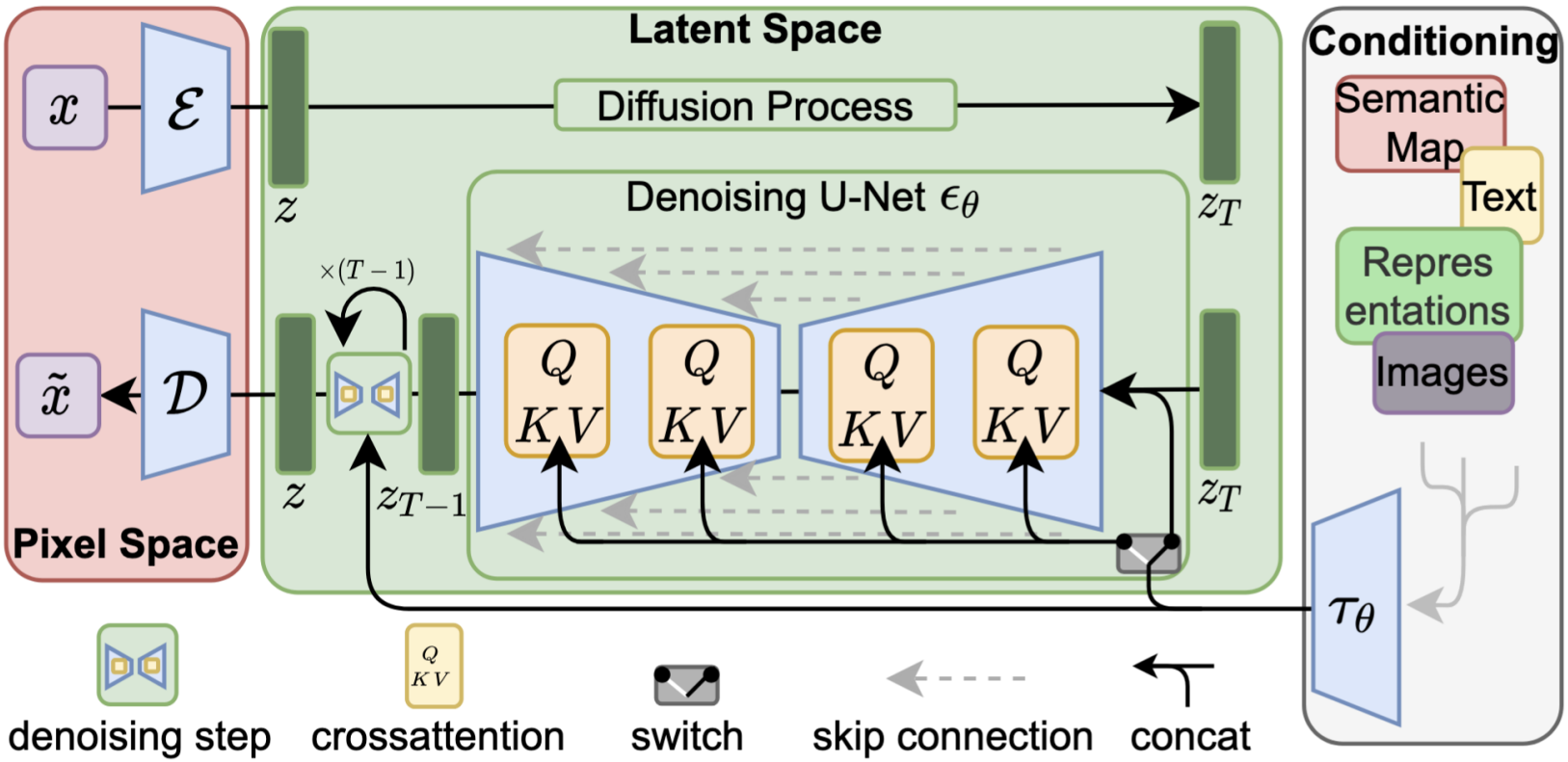

Rombach, R., Blattmann, A., Lorenz, D., Esser, P., & Ommer, B. (2022). High-resolution image synthesis with latent diffusion models. In *Proceedings of the IEEE/CVF conference on computer vision and pattern recognition* (pp. 10684-10695).

Stable Diffusion Qualitative Results

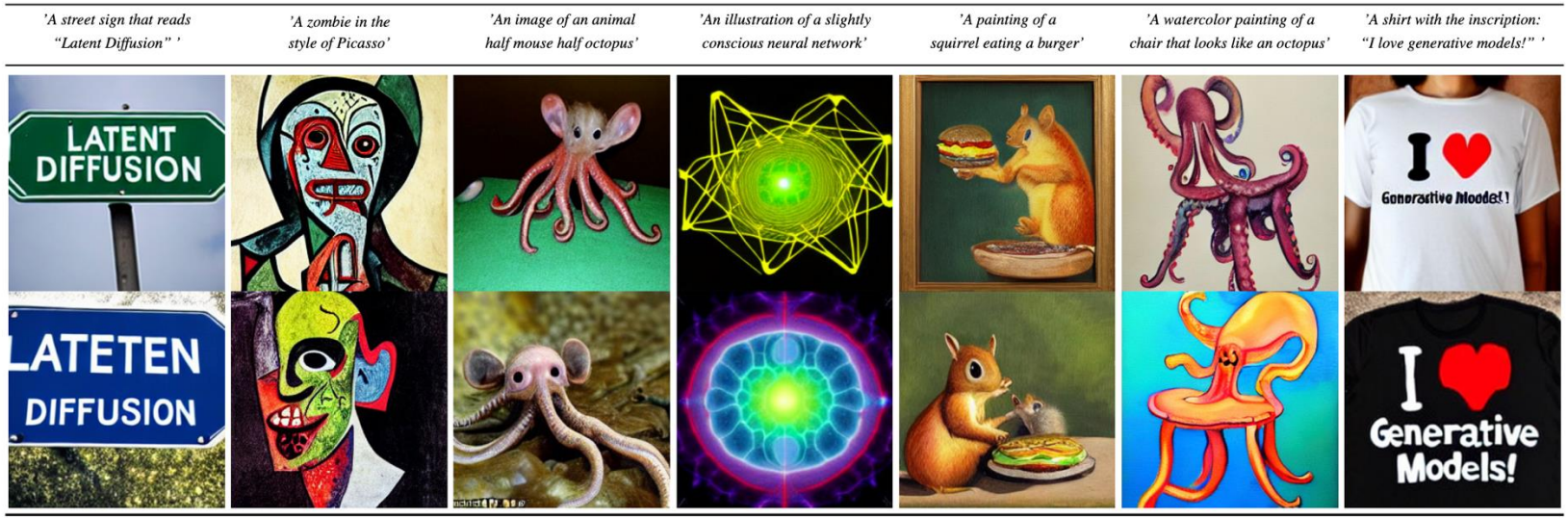

Rombach, R., Blattmann, A., Lorenz, D., Esser, P., & Ommer, B. (2022). High-resolution image synthesis with latent diffusion models. In *Proceedings of the IEEE/CVF conference on computer vision and pattern recognition* (pp. 10684-10695).

Impressive results like these need more than CLIP and cross-attention.

Conditioning is not enough to ensure the generative model follows the text prompt – for that we also need **guidance**.

Conditioning vs. Conditioning with Guidance

"a stained glass window of a panda eating bamboo"

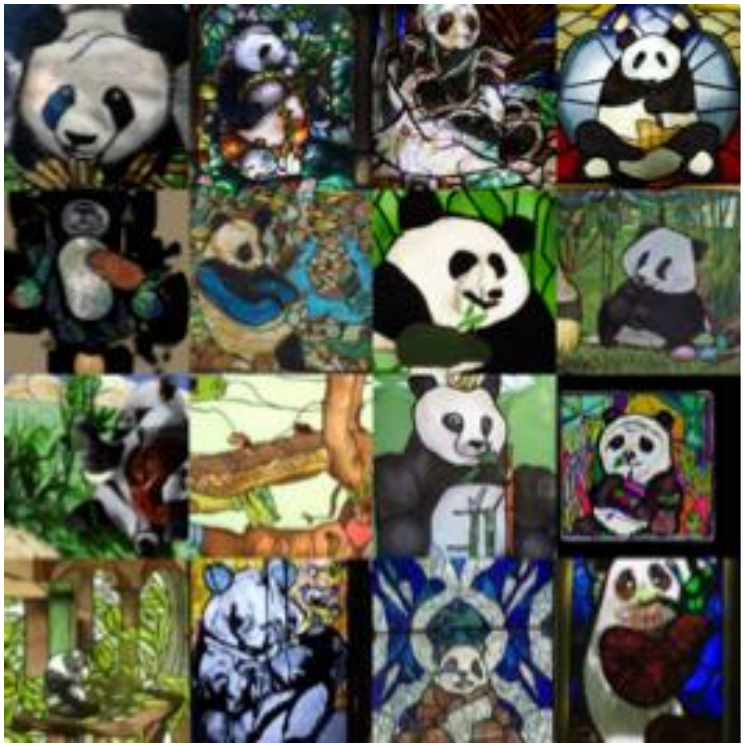

Conditioning alone generates images related to the prompt.

But **conditioning with guidance** ensures stricter adherence to instructions.

Why Is Guidance Needed?

- $\boldsymbol{g_w}(\boldsymbol{z}_t, t, \boldsymbol{c})$ is trained to minimize the noise estimation loss:

$$\mathcal{L}(\boldsymbol{w}) = ||\boldsymbol{g_w}(\boldsymbol{z_t}, t, \boldsymbol{c}) - \boldsymbol{\epsilon}||^2$$

The model may learn to depend mostly on the noised images and not enough on the text input.

- E.g., model coefficients for text embeddings small in magnitude compared to image input.
- Especially likely when with a long noise schedule T
  - But we want a long noise schedule T for good results!

Classifier-Free Guidance

- **Classifier-free guidance (CFG)** is a widely utilized approach for explicitly weighting the model dependance on the text conditioning. Conceptually:
- Train two denoising models:
  - $\boldsymbol{f_\theta}(\boldsymbol{z}_t, t)$ does **not condition** on the text embedding
  - $\boldsymbol{g_w}(\boldsymbol{z}_t, t, \boldsymbol{c})$ **does condition** on the text embedding
- When predicting noise, introduce guidance scale $\boldsymbol{\lambda}$

$$\begin{aligned}\boldsymbol{\epsilon}_{\text{pred}} &= (1-\boldsymbol{\lambda})\boldsymbol{f_\theta}(\boldsymbol{z}_t, t) + \boldsymbol{\lambda}\, \boldsymbol{g_w}(\boldsymbol{z}_t, t, \boldsymbol{c}) \\ &= \boldsymbol{f_\theta}(\boldsymbol{z}_t, t) + \boldsymbol{\lambda}\big(\boldsymbol{g_w}(\boldsymbol{z}_t, t, \boldsymbol{c}) - \boldsymbol{f_\theta}(\boldsymbol{z}_t, t)\big)\end{aligned}$$

where $\boldsymbol{\lambda} > 1$ prioritizes context guidance and penalizes unconditional prediction.

Effect of Guidance Scale

"a stained glass window of a panda eating bamboo"

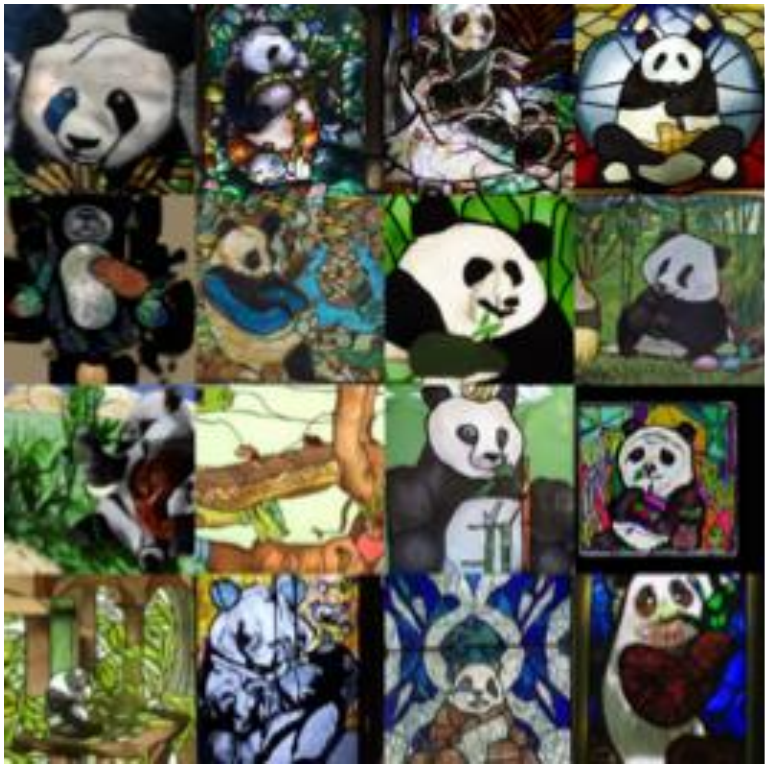

$\lambda = 0$

$\lambda = 3$

Larger λ values result in stricter adherence to prompt

More Examples: Guidance Scale

"A collie with a pink hat" (λ = CFG)

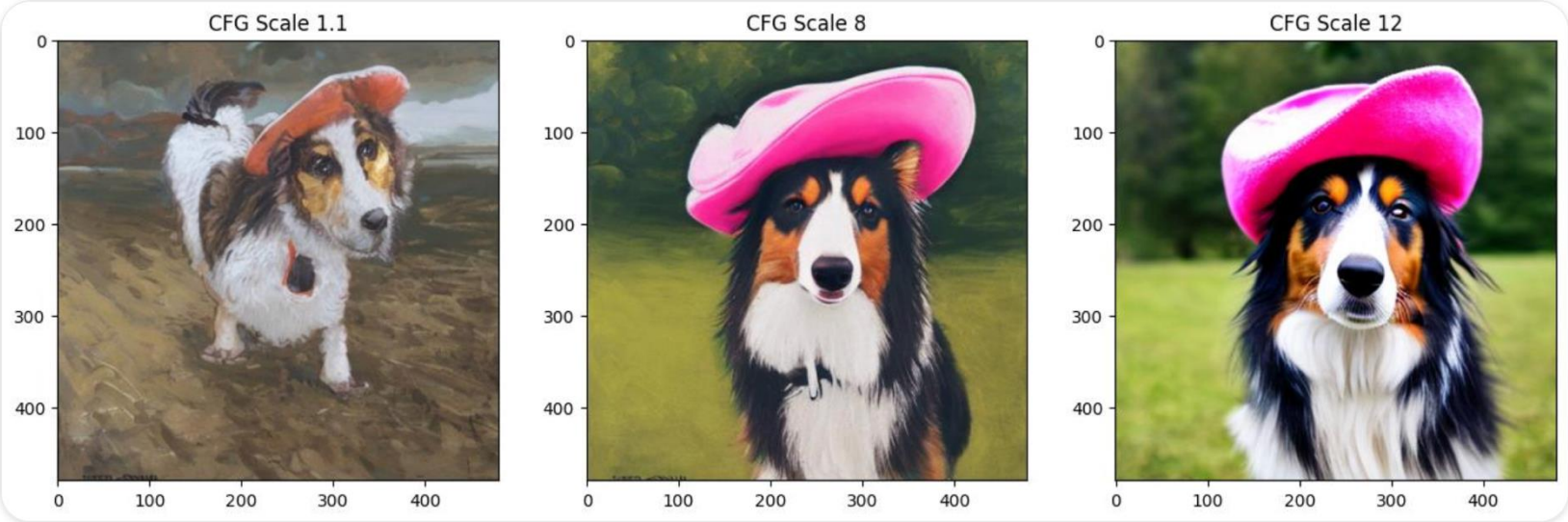

- Intuitively and loosely speaking:
  - Small λ: More creative interpretation of prompt
  - Large λ: Less creative; stricter adherence to prompt
- $\lambda \in [1, 10]$ is common; 7 or 8 often the default.

Simplifying Classifier-Free Guidance: Training

- Recall that we said **conceptually**, train two models:
  - $\boldsymbol{f_\theta}(\boldsymbol{z}_t, t)$ does **not condition** on the text embedding
  - $\boldsymbol{g_w}(\boldsymbol{z}_t, t, \boldsymbol{c})$ **does condition** on the text embedding
- **Practically** not necessary, **train one model** $\boldsymbol{g_w}(\boldsymbol{z}_t, t, \boldsymbol{c})$ with the following trick:
  - During training, randomly with probability $\approx [0.1, 0.2]$
    - Set $\boldsymbol{c}$ to the embedding of a special null placeholder $\emptyset$
  - Else train as normal with $\boldsymbol{c}$
- $\boldsymbol{g_w}(\boldsymbol{z}_t, t, \boldsymbol{c}_\emptyset)$ serves to approximate $\boldsymbol{f_\theta}(\boldsymbol{z}_t, t)$ but without training two separate models.

Simplifying Classifier-Free Guidance: Inference

- For inference: Run forward propagation in $\boldsymbol{g_w}$ **twice** for each input $\boldsymbol{z}_t, t, c$:
  - $\boldsymbol{\epsilon_{c_\emptyset}} = \boldsymbol{g_w}(\boldsymbol{z}_t, t, \boldsymbol{c_\emptyset})$ **ignores** the text input
  - $\boldsymbol{\epsilon_c} = \boldsymbol{g_w}(\boldsymbol{z}_t, t, \boldsymbol{c})$ **conditions** on the text input
- When predicting noise, with guidance scale $\boldsymbol{\lambda}$

$$\begin{aligned}\boldsymbol{\epsilon}_{\text{pred}} &= (1-\boldsymbol{\lambda})\boldsymbol{\epsilon_{c_\emptyset}} + \boldsymbol{\lambda}\,\boldsymbol{\epsilon_c} \\ &= \boldsymbol{\epsilon_{c_\emptyset}} + \boldsymbol{\lambda}\left(\boldsymbol{\epsilon_c} - \boldsymbol{\epsilon_{c_\emptyset}}\right)\end{aligned}$$

Doubles inference runtime but cuts memory requirements and simplifies training.

Speaking of Runtime…

- The computational complexity to generate an image from text scales as:
  1. Forward propagation in CLIP text encoder
  2. (Forward propagations in decoder UNet) * 2T where
     - 2 comes from the two predictions with classifier-free guidance
     - T comes from the selected noise schedule for the diffusion process
- The two crucial factors are:
  1. The choice of T:
     - Smaller T: Faster inference, worse quality
     - Greater T: Slower inference, better quality
  2. Forward propagation in the decoder UNet, which depends on
     - The number of model parameters
     - And the resolution image resolution

What if we want high resolution images but don't want to increase the runtime?

Runtime and Latent Diffusion

What if we want high resolution images but don't want to increase the runtime?

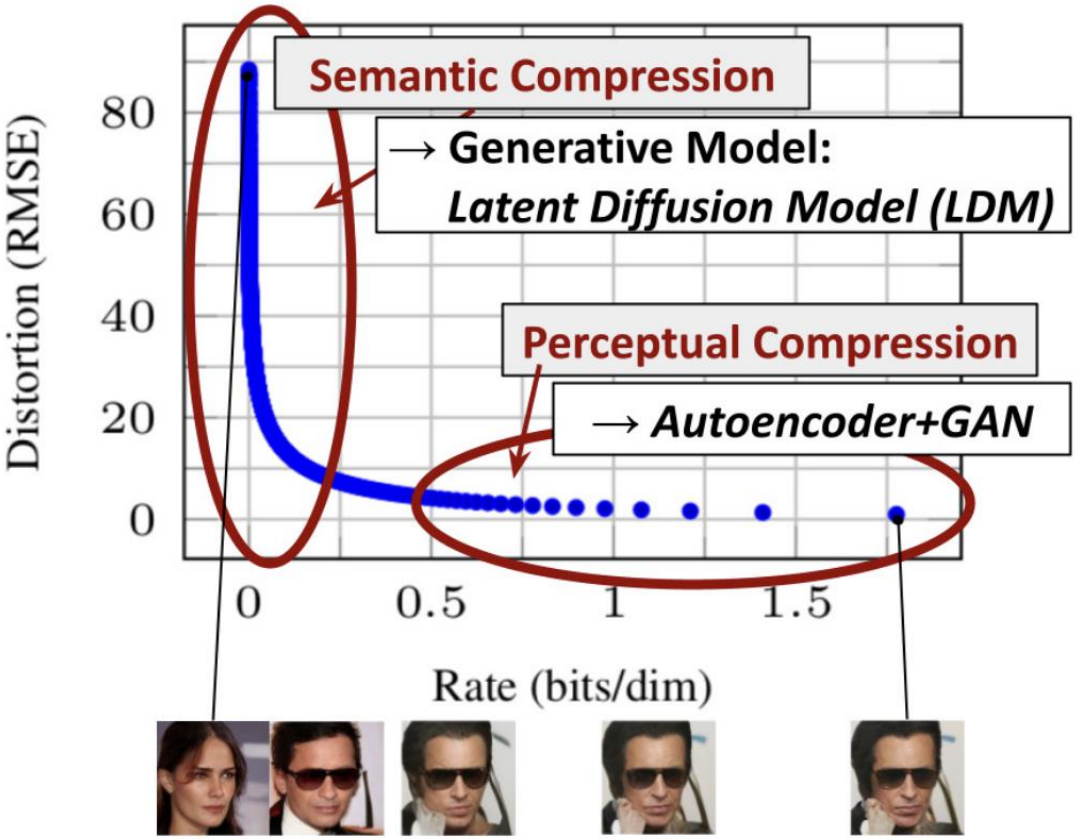

- Rather than compressing the image resolution…
- Learn a lower dimensional semantic representation
- Run diffusion in the latent space

- This is the approach taken by Stable Diffusion

Stable (Latent) Diffusion

Autoencoder model transforms image $\boldsymbol{x}$ in pixel space ($3 \times \text{width} \times \text{height}$) to latent representation $|\boldsymbol{z}| \ll (3 \times \text{width} \times \text{height})$.

- Diffusion happens in the smaller latent space
- Autoencoder just trained on reconstruction loss (just learns to compress/decompress images)

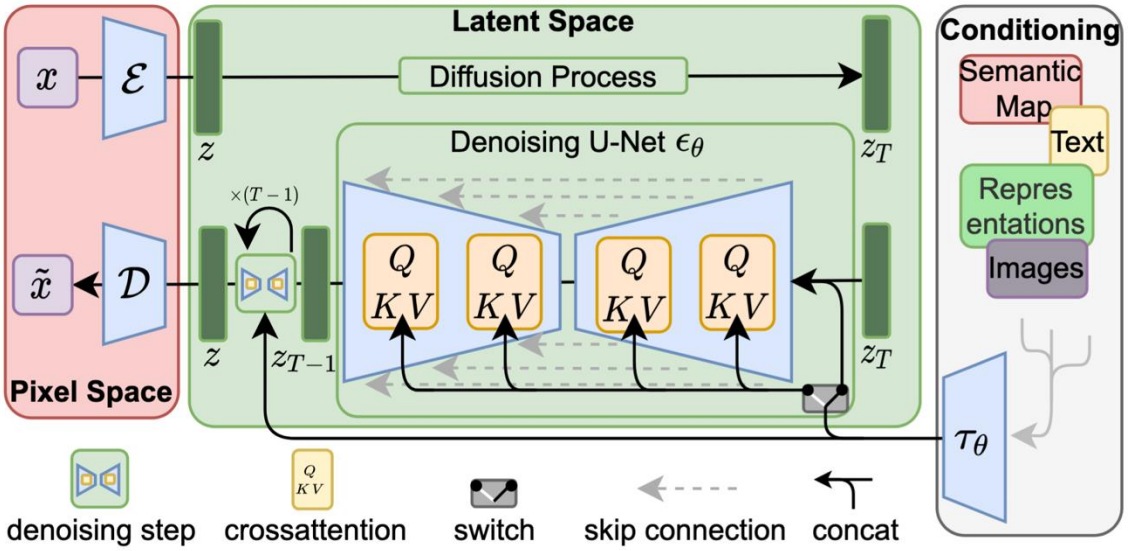

- Enables 2-10 times faster image generation (for the same quality).
- Or enhanced quality (for the same image generation time)