All dimensions in millimetres

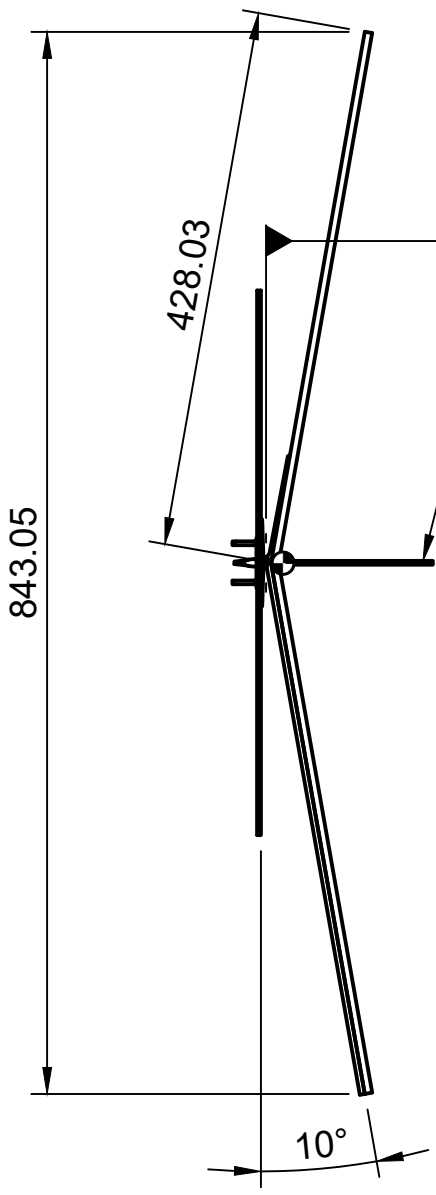

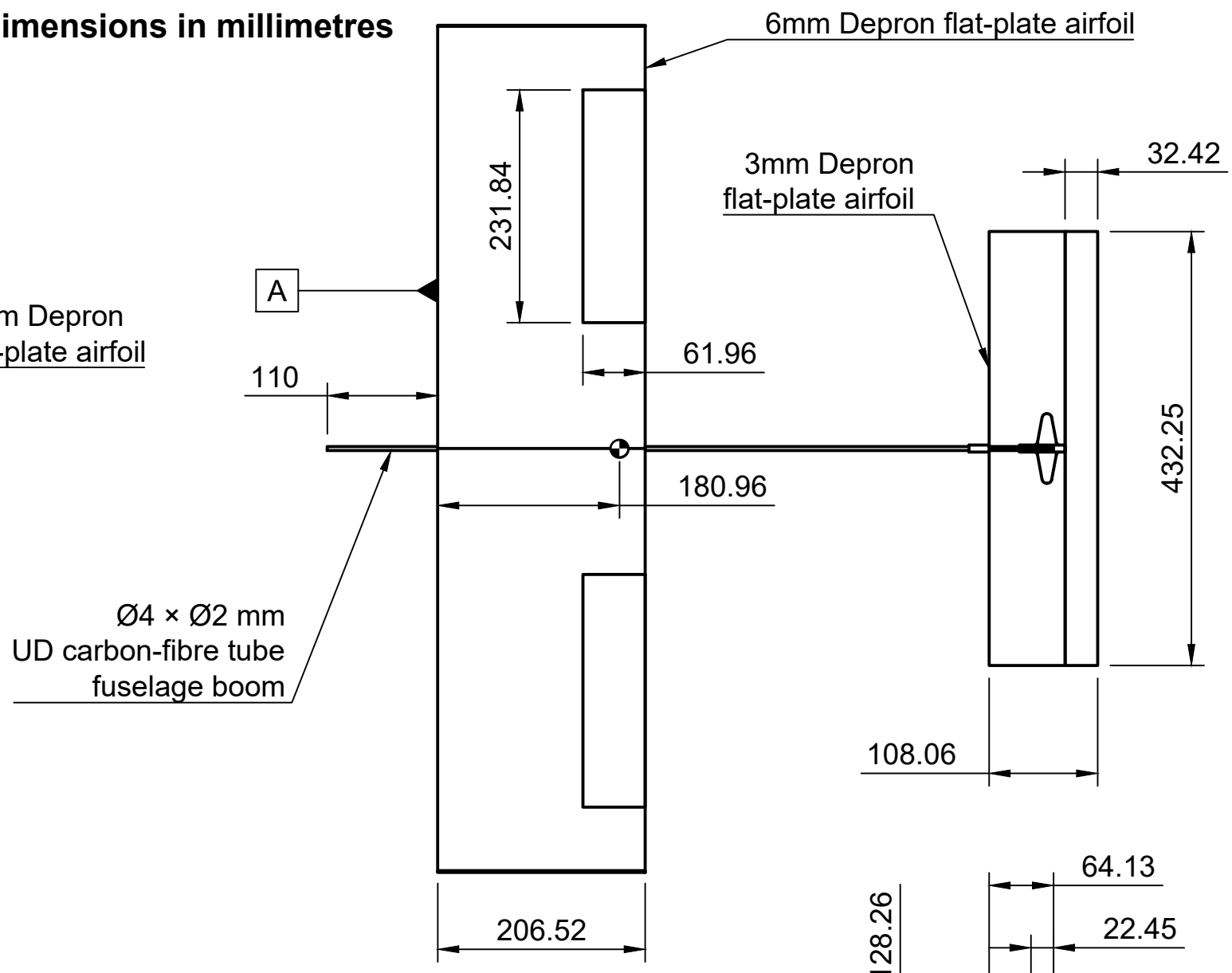

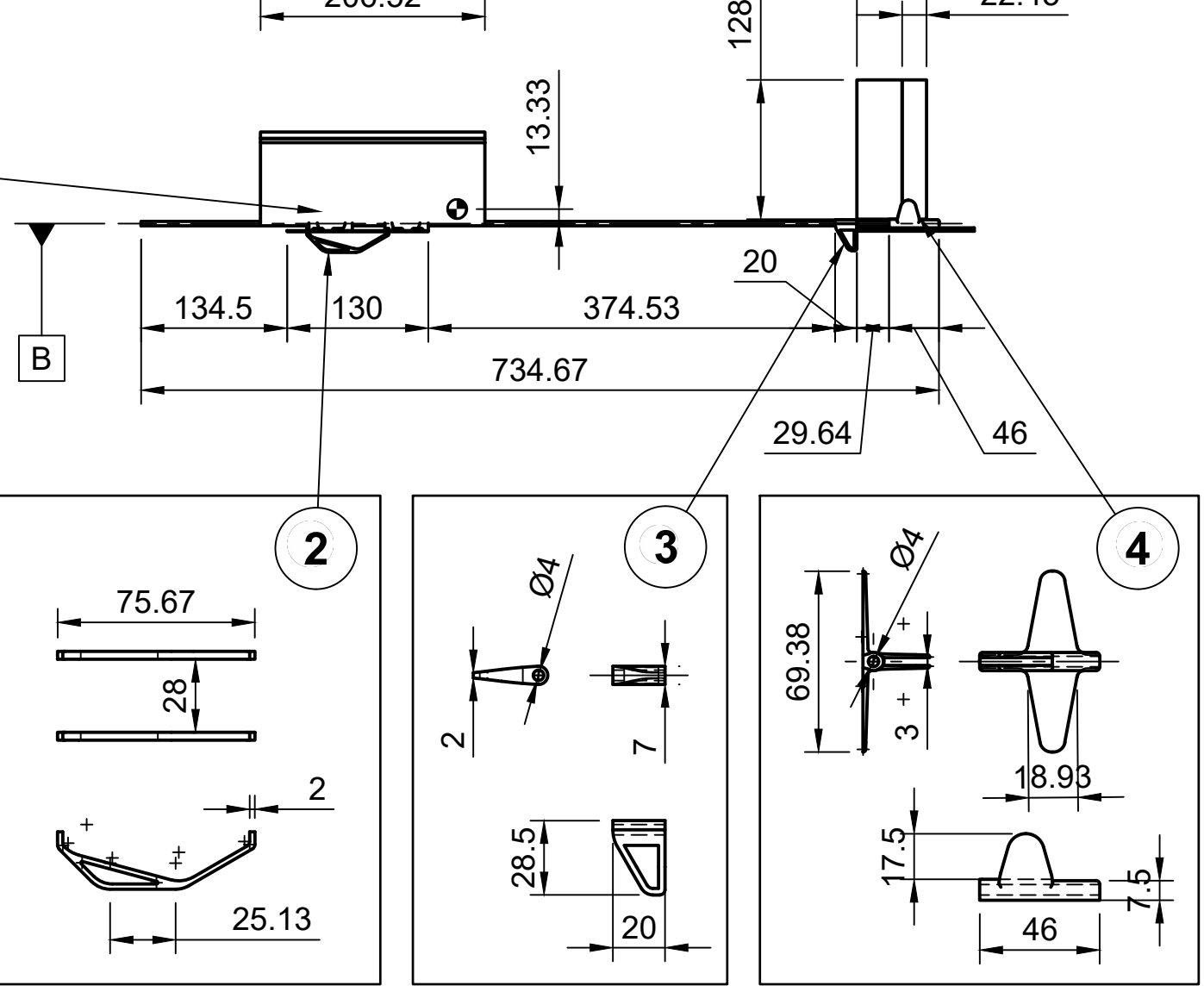

Detail 1
PAHT-CF 3D-printed
wing mount and avionics tray

Detail 2
PLA-CF 3D-printed
main skid

Detail 3
PAHT-CF 3D-printed
tail skid

Detail 4
PAHT-CF 3D-printed
tail mount