**All dimensions in millimetres**

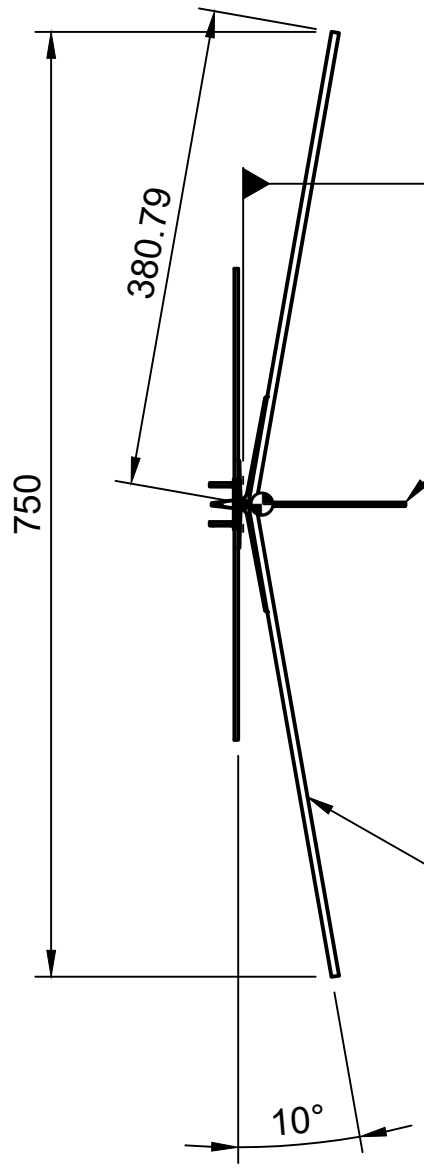


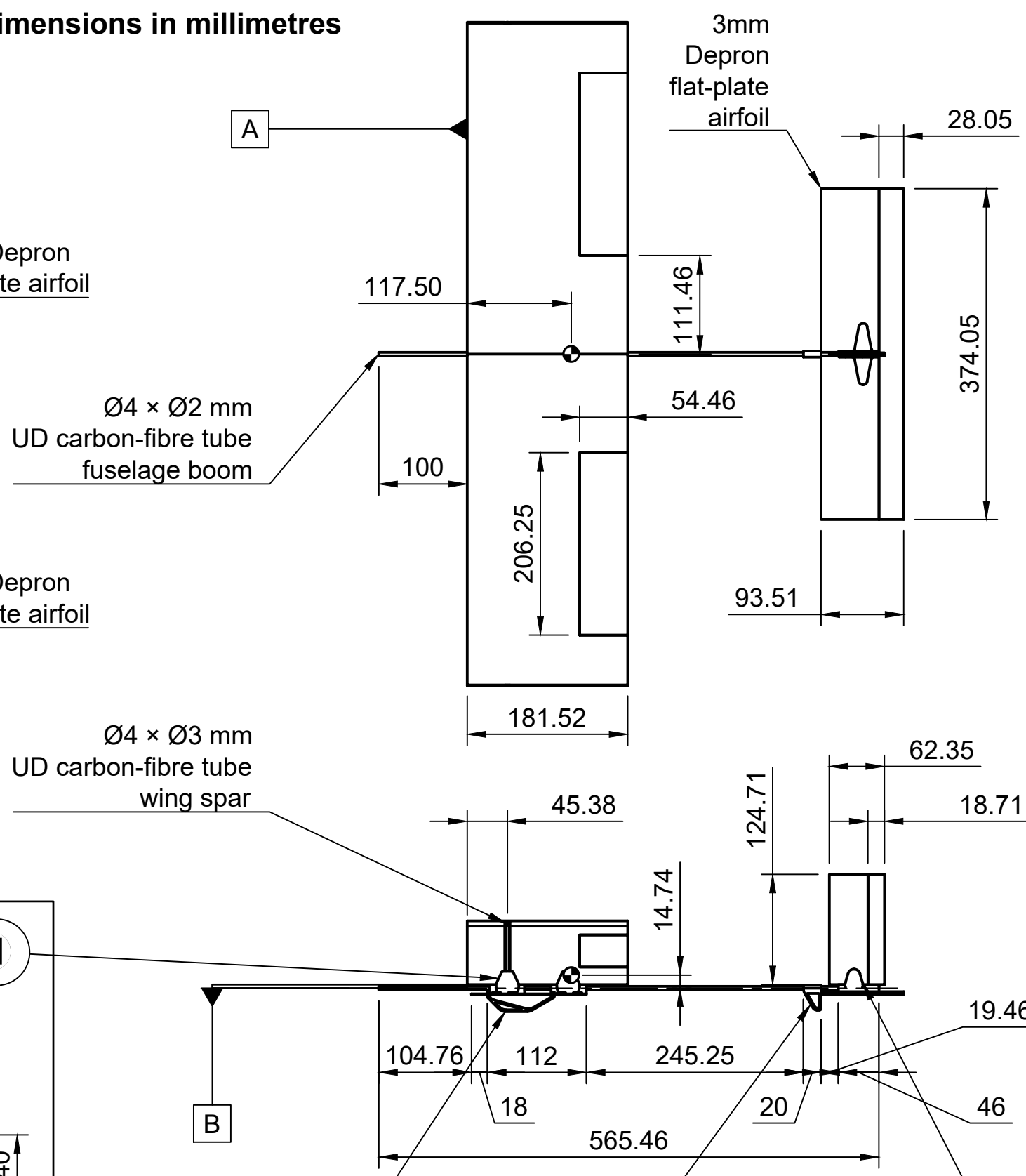


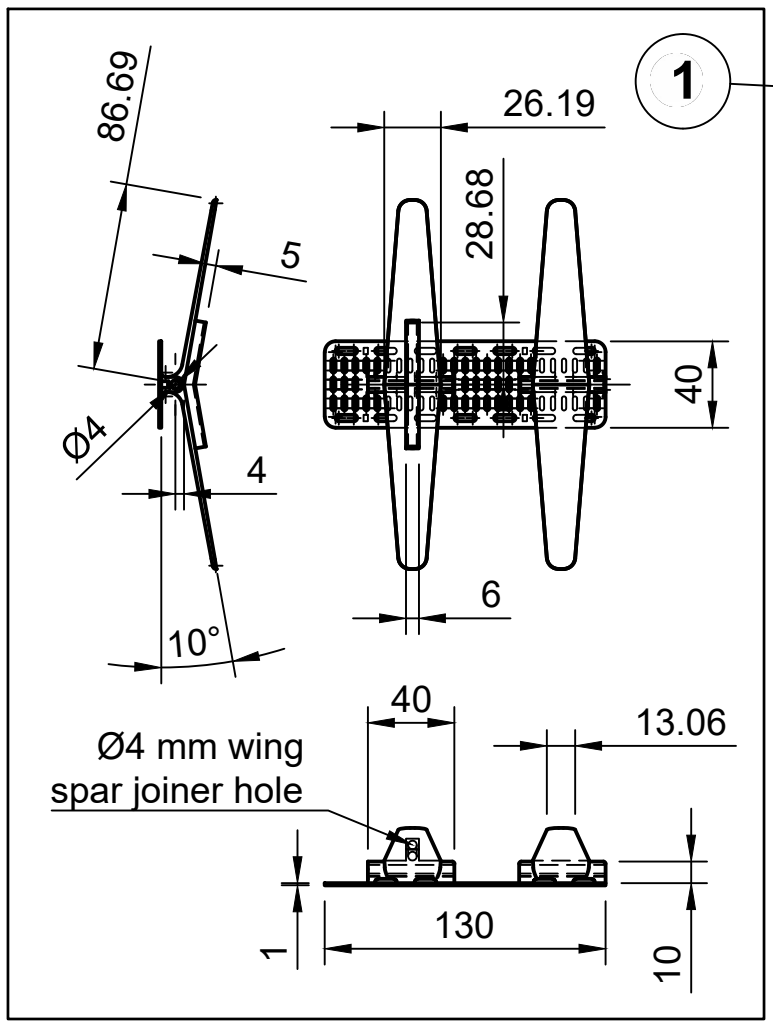


**Detail 1**
PLA-CF 3D-printed
wing mount and avionics tray

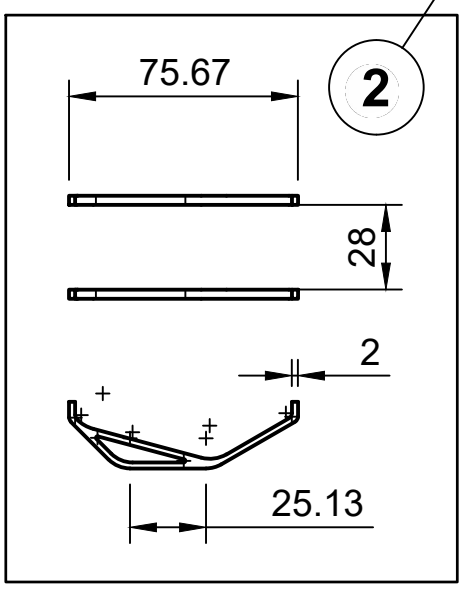


**Detail 2**
PLA-CF 3D-printed
main skid

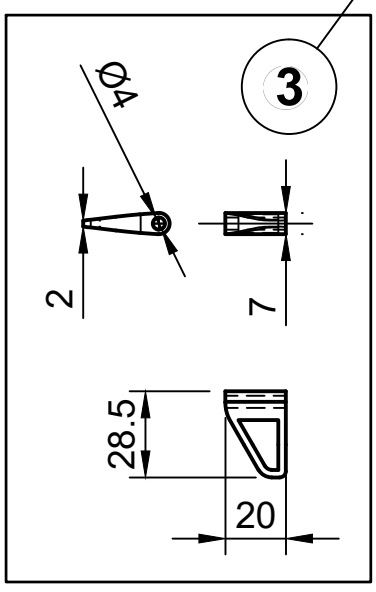


**Detail 3**
PAHT-CF 3D-printed
tail skid

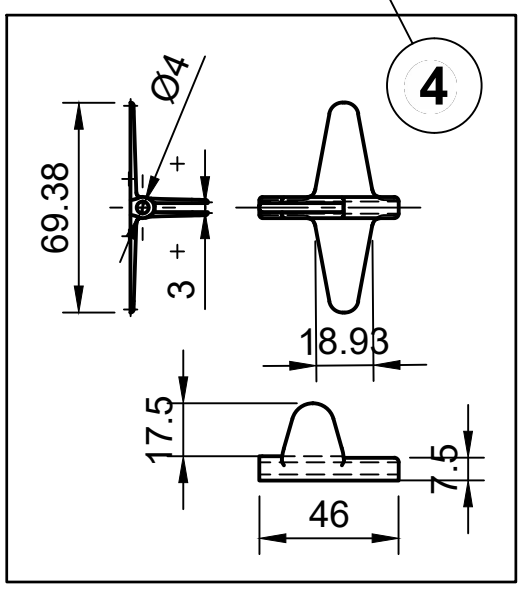


**Detail 4**
PAHT-CF 3D-printed
tail mount