All dimensions in millimetres

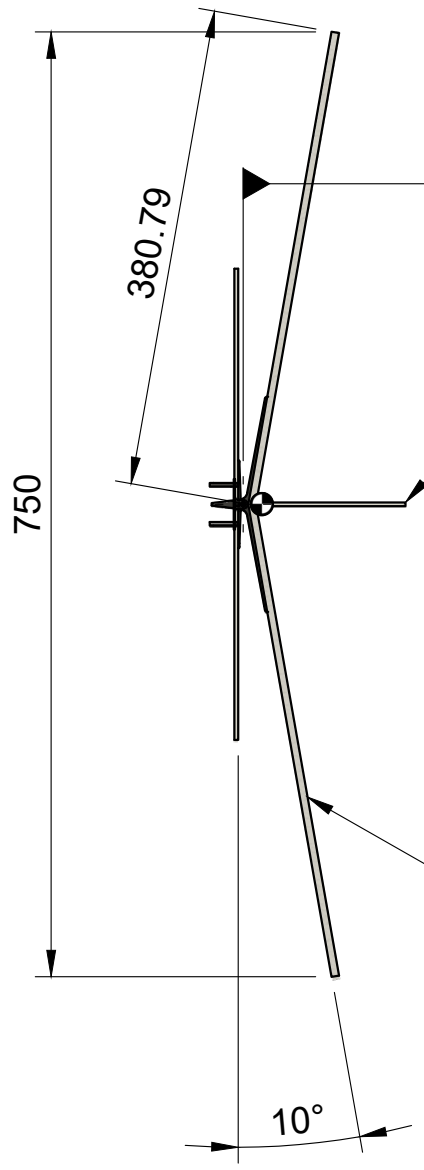

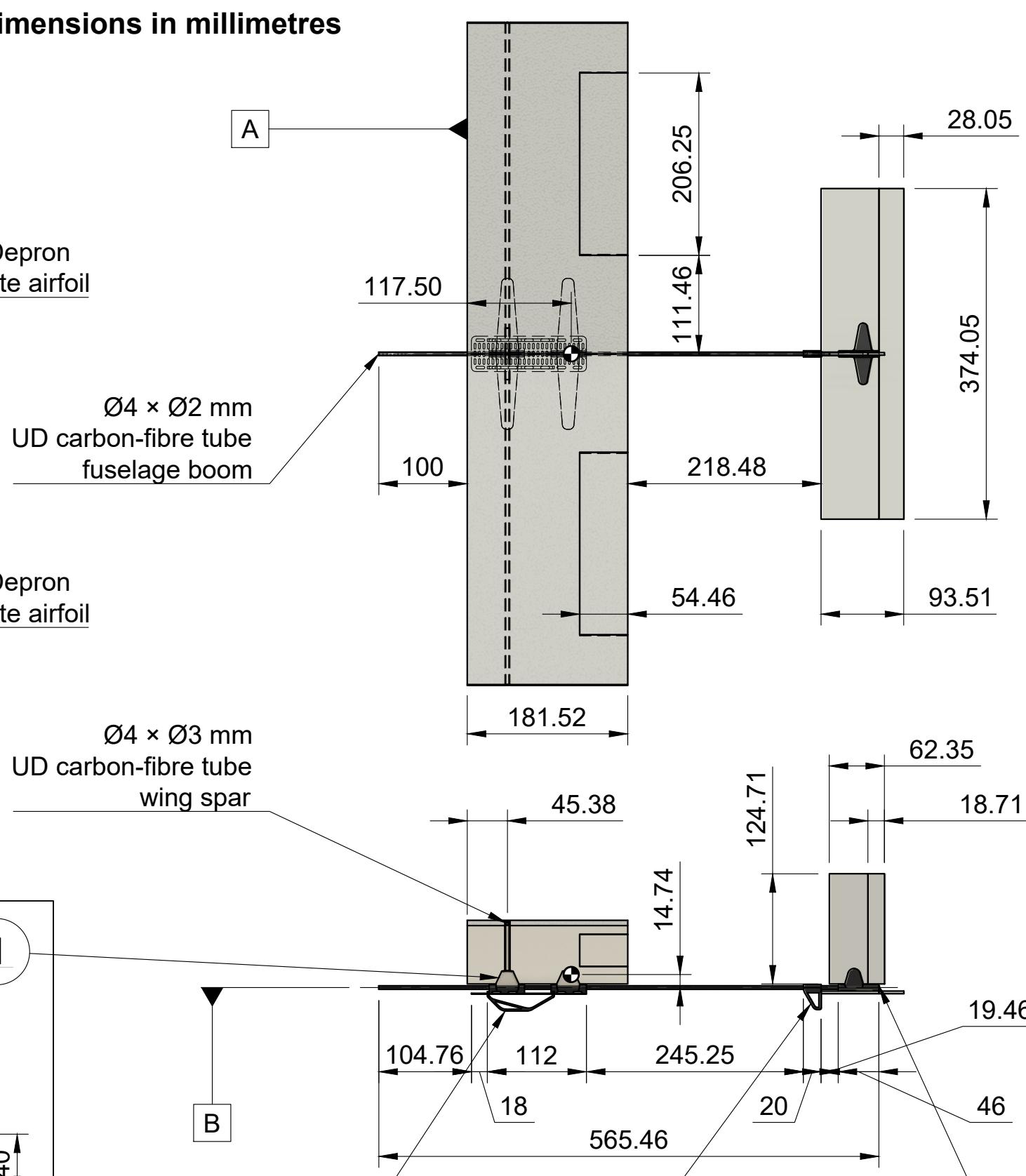

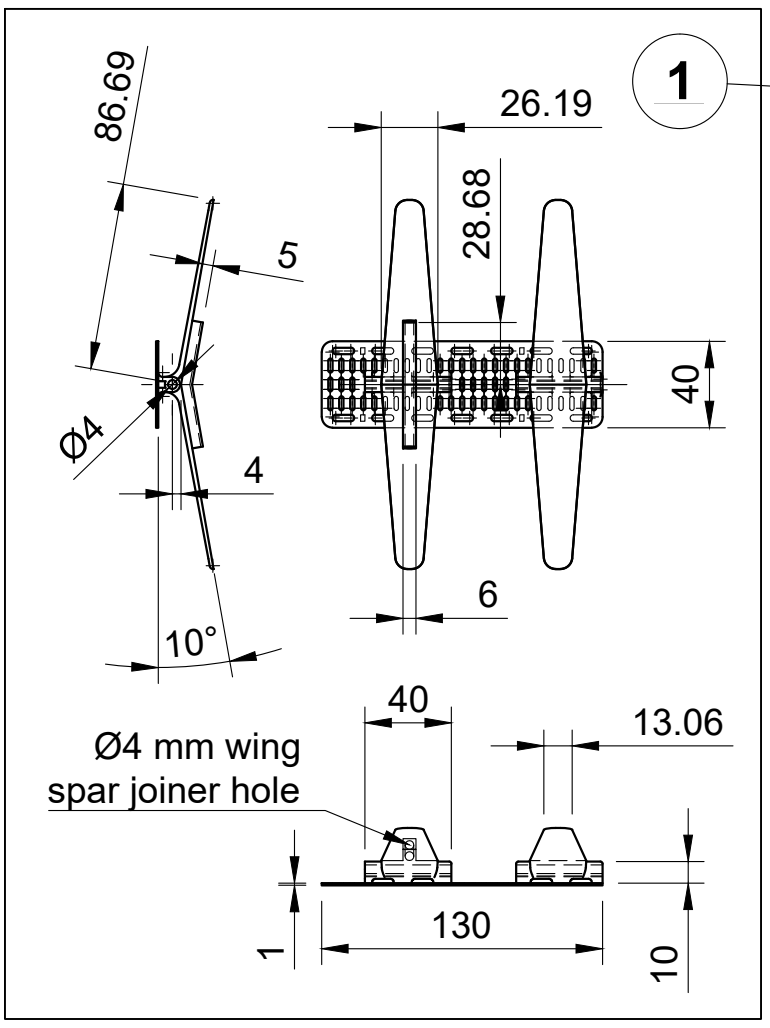

Detail 1
PLA-CF 3D-printed
wing mount and avionics tray

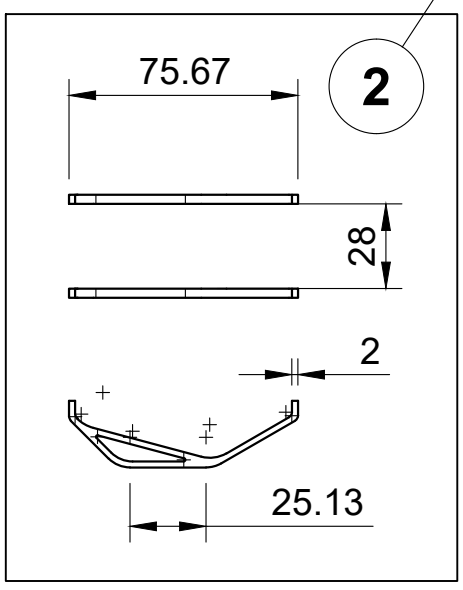

Detail 2
PLA-CF 3D-printed
main skid

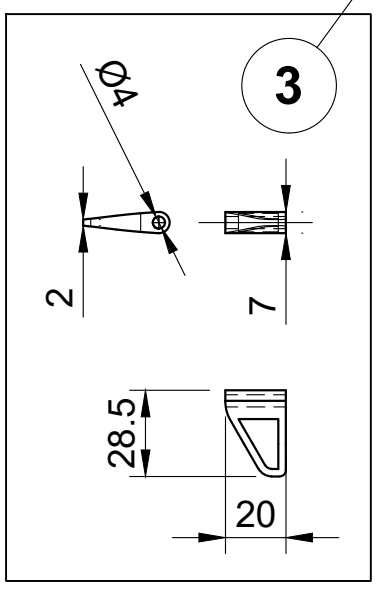

Detail 3
PAHT-CF 3D-printed
tail skid

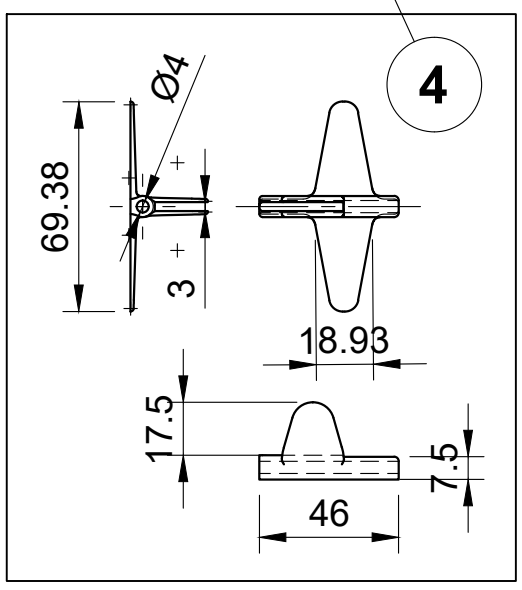

Detail 4
PAHT-CF 3D-printed
tail mount