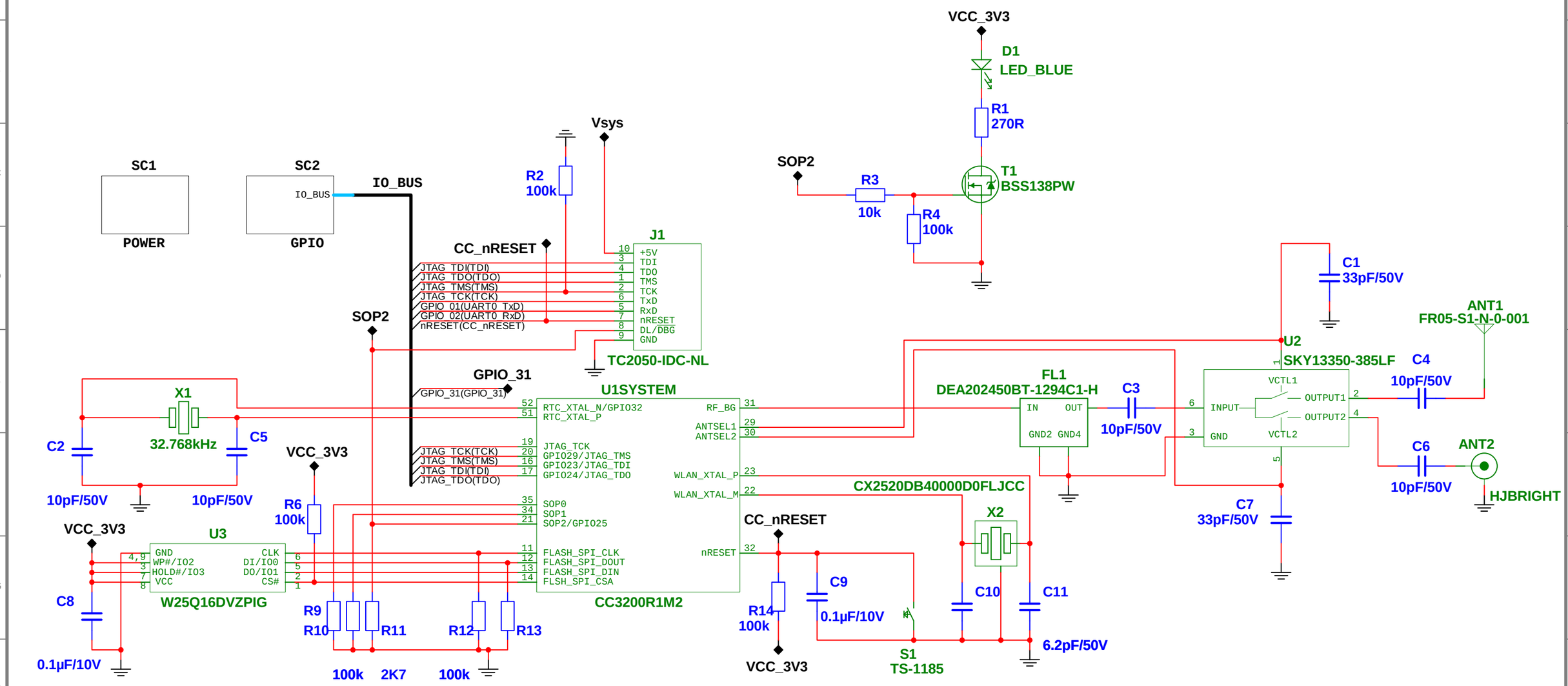


# WiPy

| | | |
|---|---|---|
| Title: WiPy V1.3 | Desc.: WiPy | |
| Designed by: Tim | Document No: 0001 | Revision: 1.3 |
| Checked by: Daniel | Date: 2015-05-13 | Size: A3 |
| Approved by: Tim / Daniel | Sheet 1 of 4 | |

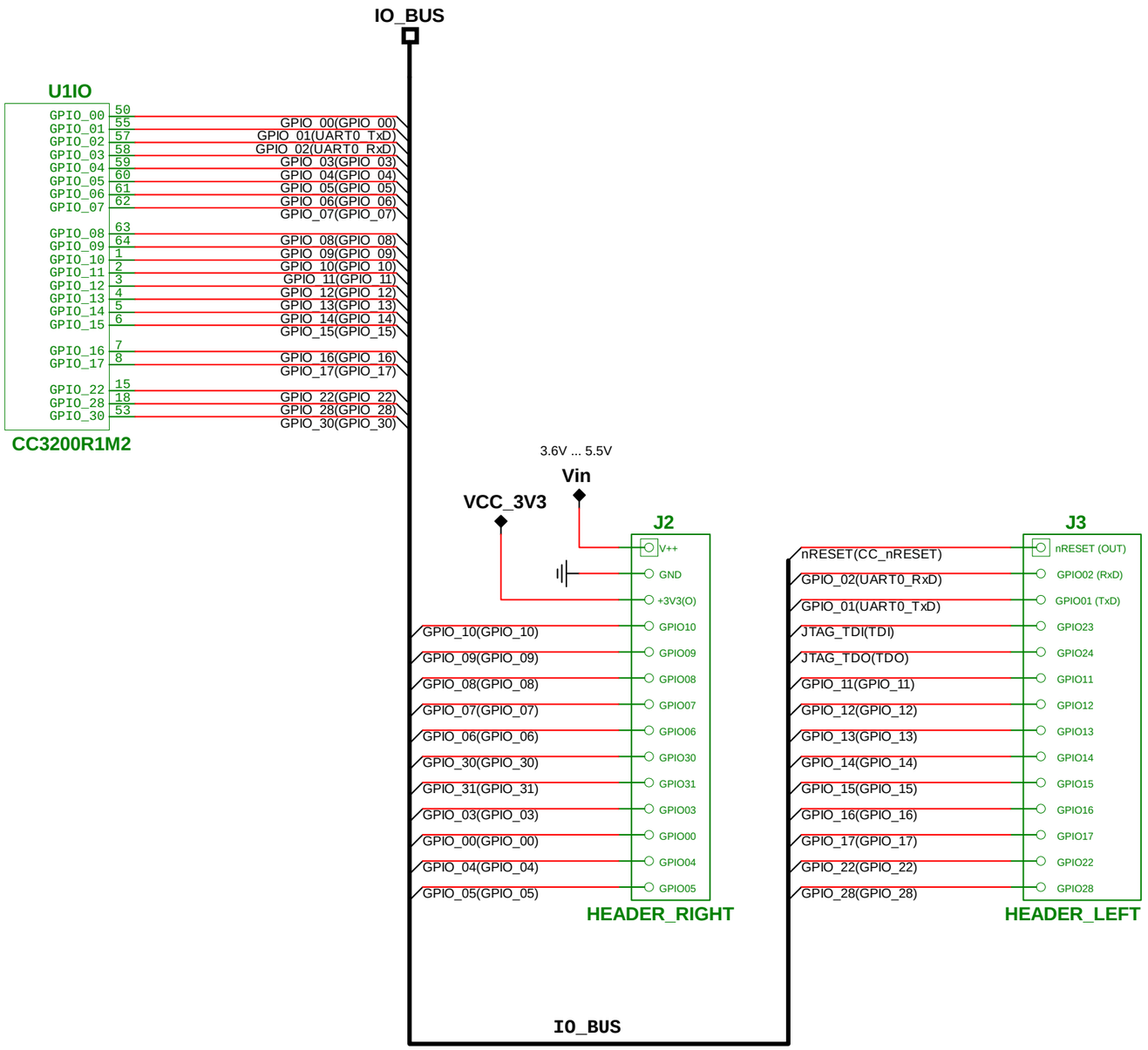


# WiPy

| | | |
|---|---|---|
| Title: GPIO | Desc.: WiPy | |
| Designed by: Tim | Document No: 0001 | Revision: 1.3 |
| Checked by: Daniel | Date: 2015-05-13 | Size: A3 |
| Approved by: Tim / Daniel | Sheet 2 of 4 | |

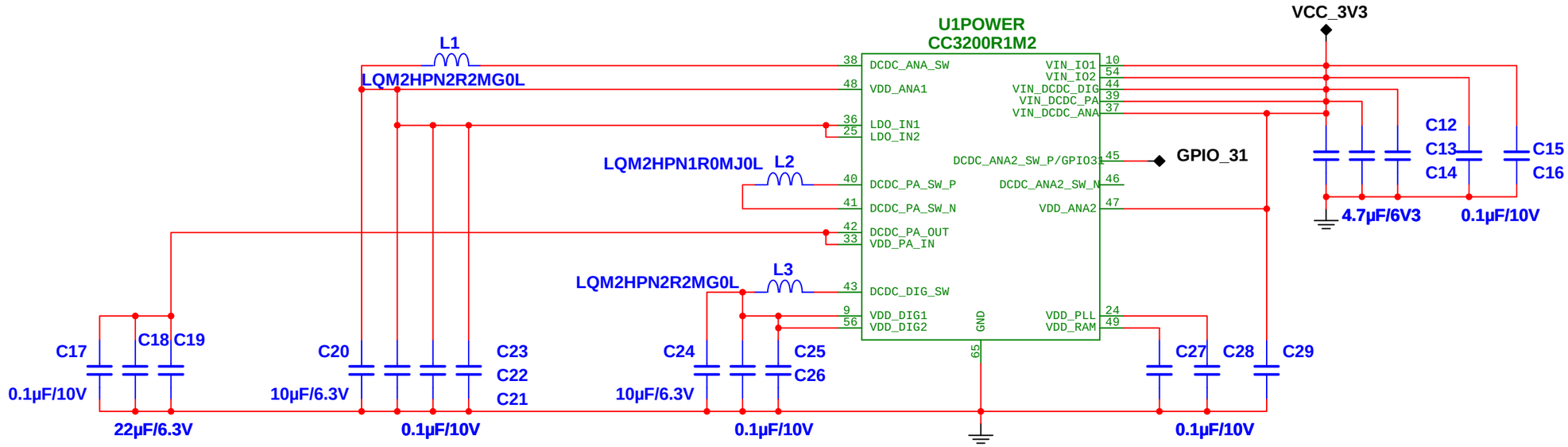


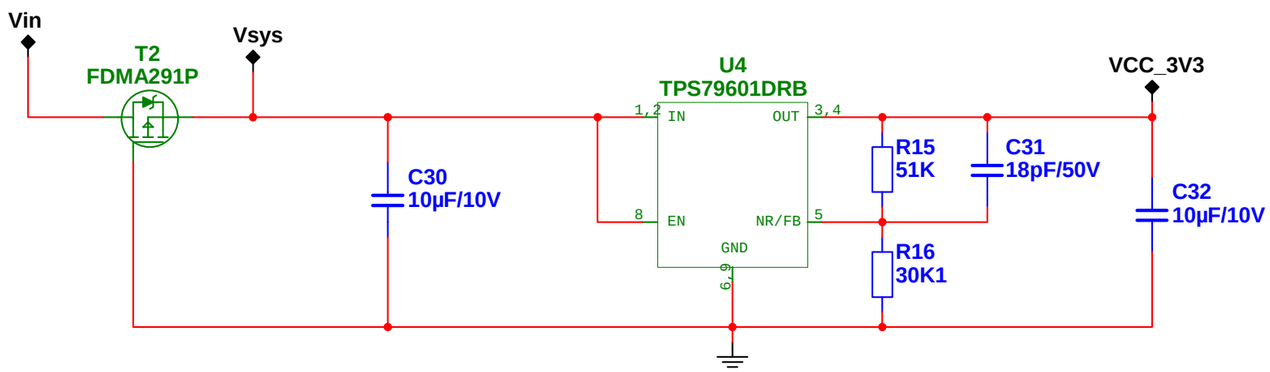


# WiPy

| | | |
|---|---|---|
| Title: POWER(SC1) | Desc.: WiPy | |
| Designed by: Tim | Document No: 0001 | Revision: 1.3 |
| Checked by: Daniel | Date: 2015-05-13 | Size: A3 |
| Approved by: Tim / Daniel | Sheet 3 of 4 | |

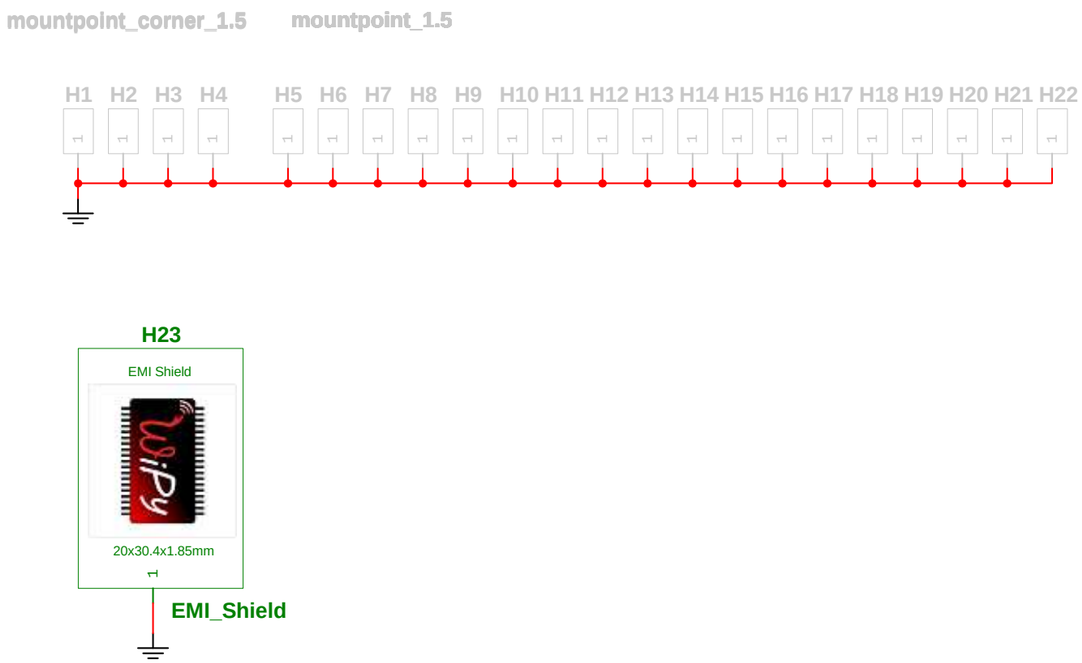


# WiPy

| | | |
|---|---|---|
| Title: Mechanical | Desc.: WiPy | |
| Designed by: Tim | Document No: 0001 | Revision: 1.3 |
| Checked by: Daniel | Date: 2015-05-13 | Size: A3 |
| Approved by: Tim / Daniel | Sheet 4 of 4 | |