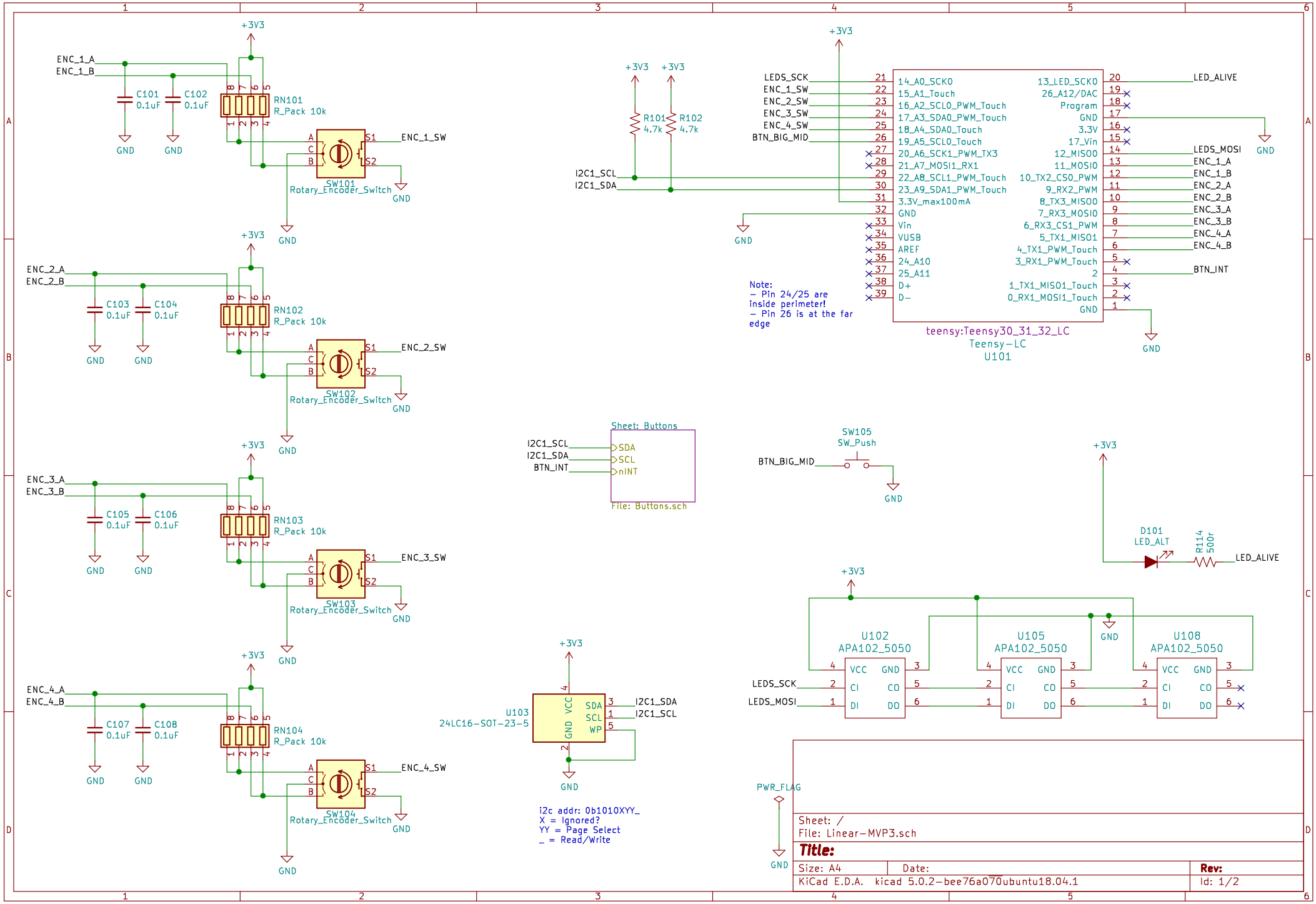
ENC_1_A
ENC_1_B
C101 0.1uF
C102 0.1uF
RN101 R_Pack 10k
SW101 Rotary_Encoder_Switch
ENC_1_SW
ENC_2_A
ENC_2_B
C103 0.1uF
C104 0.1uF
RN102 R_Pack 10k
SW102 Rotary_Encoder_Switch
ENC_2_SW
ENC_3_A
ENC_3_B
C105 0.1uF
C106 0.1uF
RN103 R_Pack 10k
SW103 Rotary_Encoder_Switch
ENC_3_SW
ENC_4_A
ENC_4_B
C107 0.1uF
C108 0.1uF
RN104 R_Pack 10k
SW104 Rotary_Encoder_Switch
ENC_4_SW
+3V3
GND
R101 4.7k
R102 4.7k
I2C1_SCL
I2C1_SDA
LEDS_SCK
ENC_1_SW
ENC_2_SW
ENC_3_SW
ENC_4_SW
BTN_BIG_MID
14_A0_SCK0
15_A1_Touch
16_A2_SCL0_PWM_Touch
17_A3_SDA0_PWM_Touch
18_A4_SDA0_Touch
19_A5_SCL0_Touch
20_A6_SCK1_PWM_TX3
21_A7_MOSI1_RX1
22_A8_SCL1_PWM_Touch
23_A9_SDA1_PWM_Touch
3.3V_max100mA
GND
Vin
VUSB
AREF
24_A10
25_A11
D+
D-
13_LED_SCK0
26_A12/DAC
Program
GND
3.3V
17_Vin
12_MISO0
11_MOSI0
10_TX2_CS0_PWM
9_RX2_PWM
8_TX3_MISO0
7_RX3_MOSI0
6_RX3_CS1_PWM
5_TX1_MISO1
4_TX1_PWM_Touch
3_RX1_PWM_Touch
2
1_TX1_MISO1_Touch
0_RX1_MOSI1_Touch
GND
LED_ALIVE
LEDS_MOSI
ENC_1_A
ENC_1_B
ENC_2_A
ENC_2_B
ENC_3_A
ENC_3_B
ENC_4_A
ENC_4_B
BTN_INT
Note:
- Pin 24/25 are inside perimeter!
- Pin 26 is at the far edge
teensy:Teensy30_31_32_LC
Teensy-LC
U101
Sheet: Buttons
SDA
SCL
nINT
File: Buttons.sch
SW105
SW_Push
D101
LED_ALT
R114
500r
U102
APA102_5050
U105
APA102_5050
U108
APA102_5050
VCC
CI
DI
GND
CO
DO
U103
24LC16-SOT-23-5
WP
i2c addr: 0b1010XYY_
X = Ignored?
YY = Page Select
_ = Read/Write
PWR_FLAG
Sheet: /
File: Linear-MVP3.sch
Title:
Size: A4
Date:
Rev:
KiCad E.D.A. kicad 5.0.2-bee76a070ubuntu18.04.1
Id: 1/2

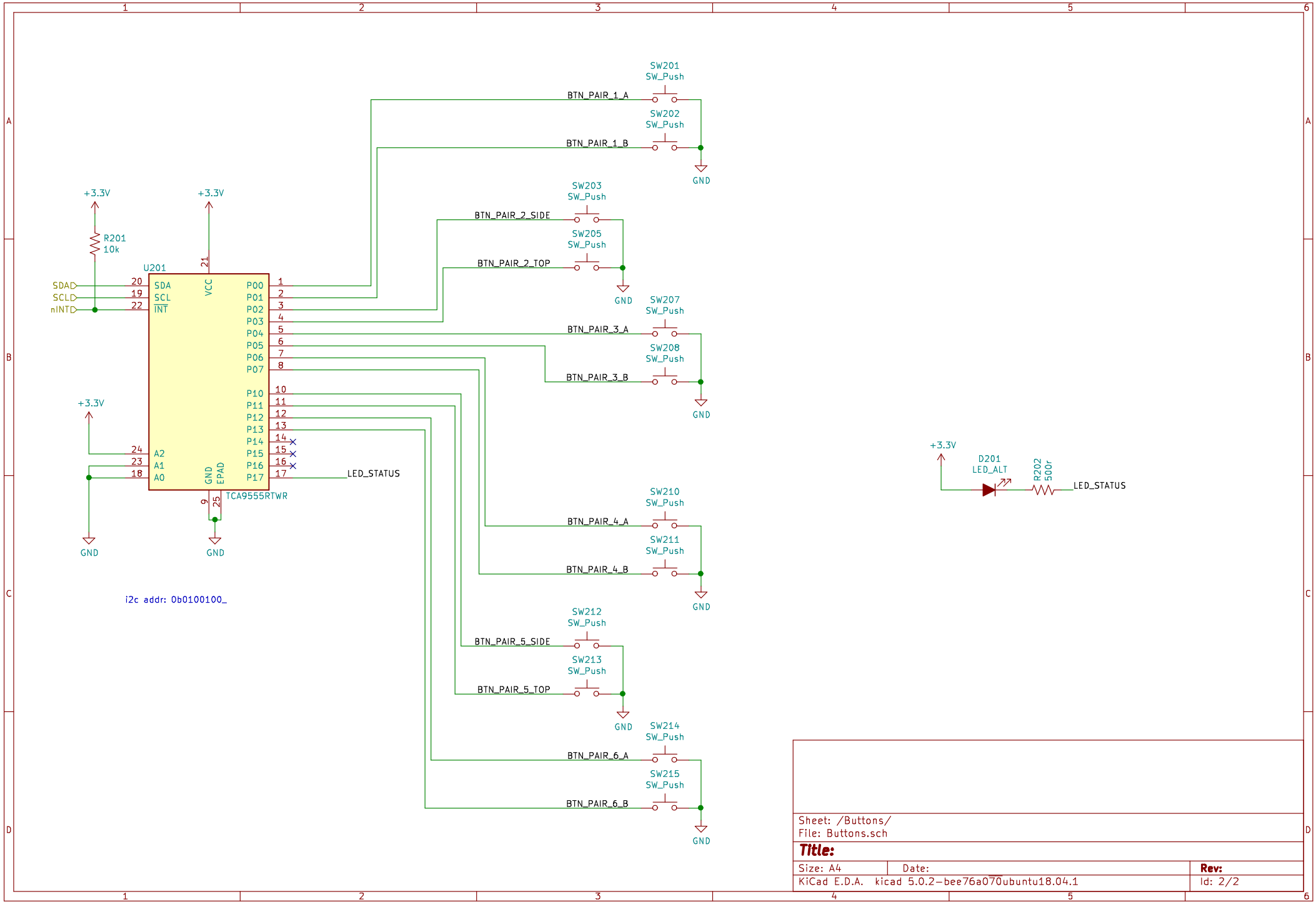
U201
TCA9555RTWR
SDA
SCL
nINT
VCC
GND
EPAD
A2
A1
A0
P00
P01
P02
P03
P04
P05
P06
P07
P10
P11
P12
P13
P14
P15
P16
P17
LED_STATUS
+3.3V
R201
10k
i2c addr: 0b0100100_
SW201
SW_Push
SW202
SW_Push
SW203
SW_Push
SW205
SW_Push
SW207
SW_Push
SW208
SW_Push
SW210
SW_Push
SW211
SW_Push
SW212
SW_Push
SW213
SW_Push
SW214
SW_Push
SW215
SW_Push
BTN_PAIR_1_A
BTN_PAIR_1_B
BTN_PAIR_2_SIDE
BTN_PAIR_2_TOP
BTN_PAIR_3_A
BTN_PAIR_3_B
BTN_PAIR_4_A
BTN_PAIR_4_B
BTN_PAIR_5_SIDE
BTN_PAIR_5_TOP
BTN_PAIR_6_A
BTN_PAIR_6_B
D201
LED_ALT
R202
500r
Sheet: /Buttons/
File: Buttons.sch
Title:
Size: A4
Date:
Rev:
KiCad E.D.A. kicad 5.0.2-bee76a070ubuntu18.04.1
Id: 2/2