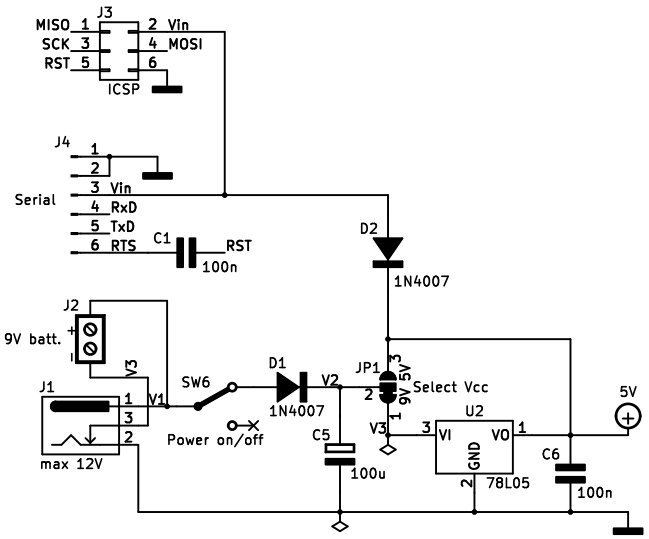

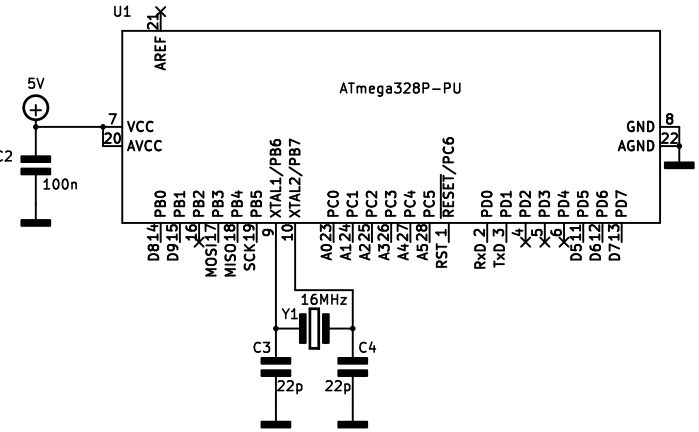

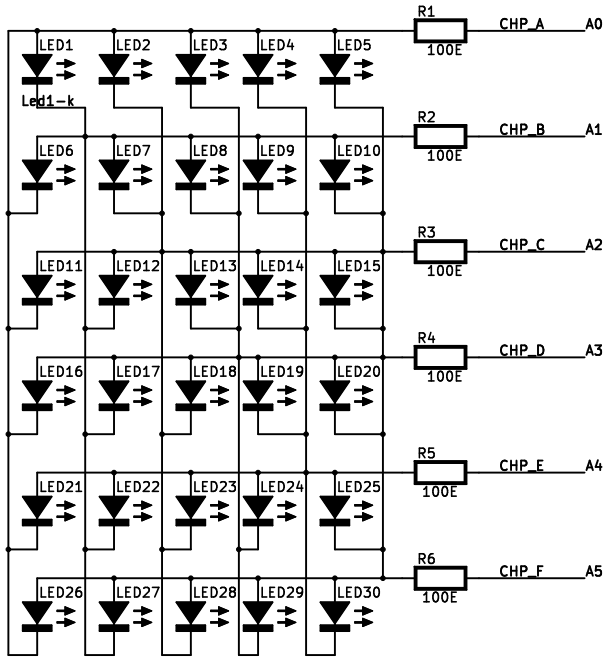

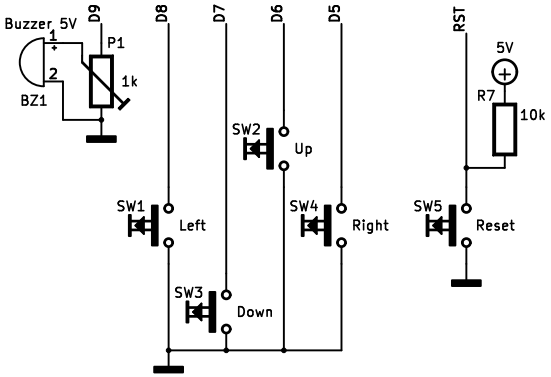

Designed by Roland
TechDen

Sheet: /
File: Game-Console.kicad_sch

Title: TechDen Game Console with 30 LEDs (Charlieplexing method)

Size: A4	Date: 2022-04-25	**Rev: 3.31**
KiCad E.D.A. kicad (6.0.4)		Id: 1/1

Logo-RvD
Logo-TechDen
Logo-Stadkamer
Logo-Stadkamer_Large