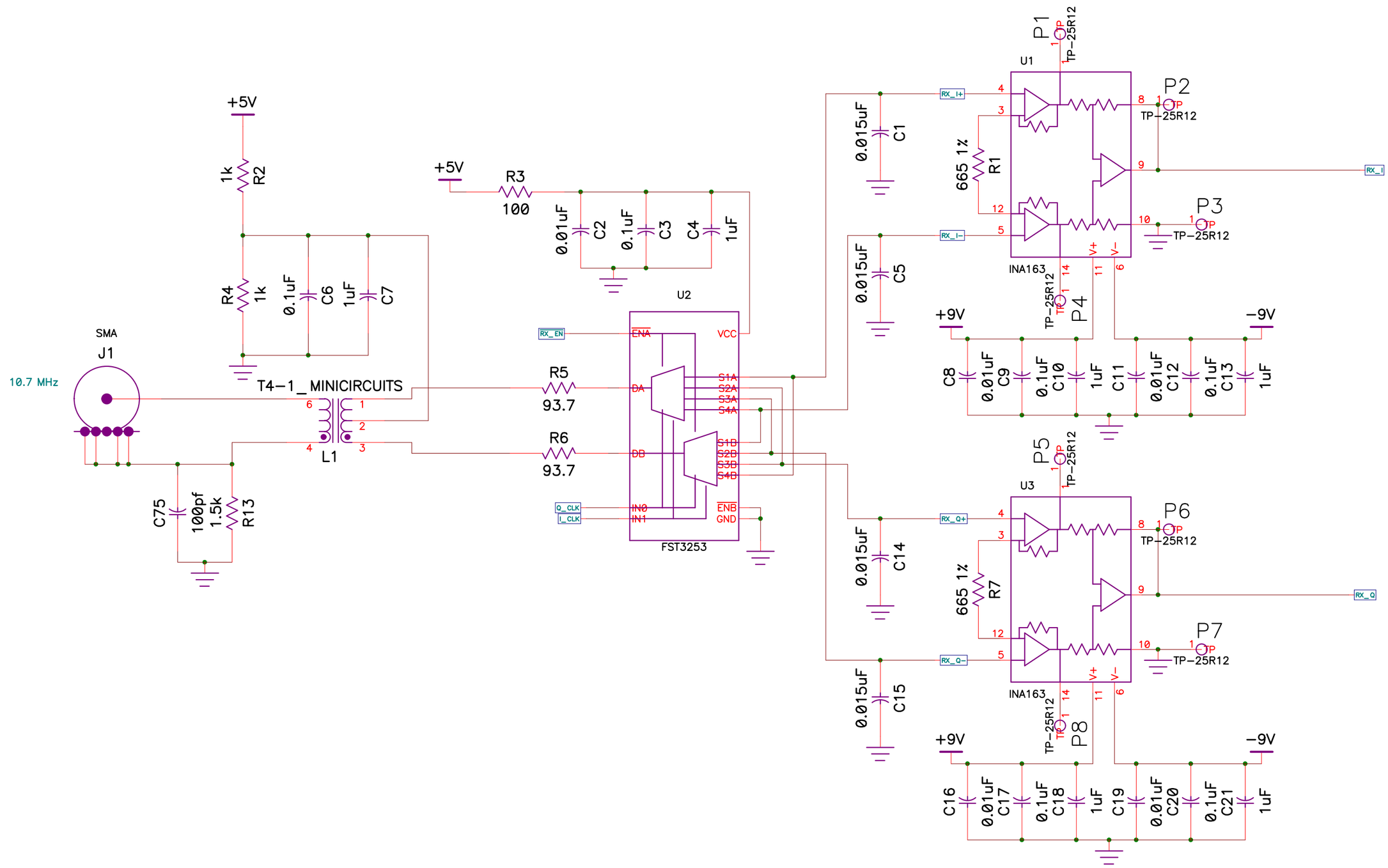

Title	Software Defined Transponder SDR RX	
Size B	Number	Rev 1
Date 9/19/06	Drawn by N9WXU	
Filename SDX.SCH	Sheet 1 of 6	