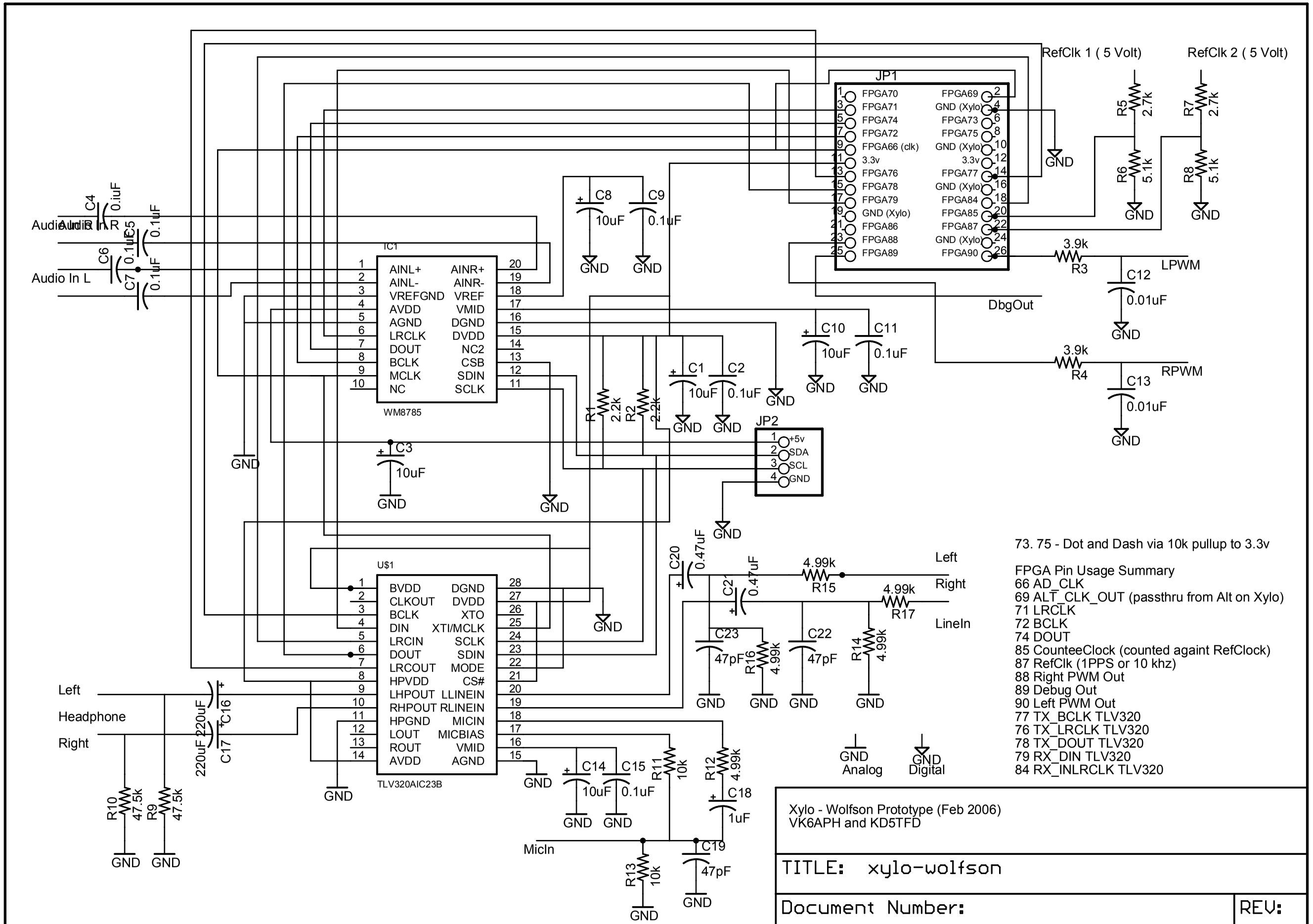

Note: R1 & R2 (I2C pulllups) may not be needed in some cases, they are || w/ 4.7k pullups on the Xylo.