SIEMENS Healthcare, P41 , ECM: 706537
10843930 VFT 000 12
Convert date: 2020-08-12T07:22:44 UTC
For signatures see info sheet (appended page)
Document is approved

VECTRON - X-ray tube assembly and Cooling Unit

[redacted] **SHS TE PV**

Technical Master

Nicole Möller
SHS TE PV R&D-VT PSE

Copyright © Siemens Healthcare GmbH
Confidential.

Document	Doc. type	Part	Version	Misc.
10843930	**VFT**	**000**	**12**	**N.A.**

SIEMENS Healthcare, P41 , ECM: 706537
10843930 VFT 000 12
Convert date: 2020-08-12T07:22:44 UTC
For signatures see info sheet (appended page)
Document is approved

History

Document history

Version	Date	Author/Dept.	Change and reason / Change Request / Defect
13	See SAP	N.Möller/R&D-VT PSE	706537: Implementation of new tube cooling 11369804, Update of Intended Use and Essential Performance, Implementation of keys from risk analysis, New Template

Copyright © Siemens Healthcare GmbH2020.
Confidential.

SIEMENS Healthcare, P41 , ECM: 706537
10843930 VFT 000 12
Convert date: 2020-08-12T07:22:44 UTC
For signatures see info sheet (appended page)
Document is approved

Table of Contents

History 2
Table of Contents 3
1 Introduction 5
1.1 Purpose of this document 5
1.2 Definitions, acronyms and abbreviations 5
1.2.1 Definitions 5
1.2.2 Acronyms and abbreviations 5
1.3 References 6
2 Content 7
2.1 General Data 7
2.2 Laws, standards and regulations 8
2.3 Type Code 9
2.4 Description 9
2.5 Notes (including safety information) 10
2.5.1 Sustainability 10
2.5.2 Intended Use and Essential Performance 10
2.5.2.1 Intended Use 10
2.5.2.2 Essential Performance 10
2.5.3 Safety information 11
2.5.4 Labels and pictograms on the x-ray tube assembly housing and cooling unit 14
2.5.5 Location of Labels 16
2.6 Technical data 18
2.6.1 X-ray tube 18
2.6.2 X-ray tube assembly 19
2.6.3 Cooling unit (XTC) 19
2.6.4 Operation, transport and storage conditions 20
2.7 Load charts 20
2.7.1 Anode heating and cooling curve 20
2.7.2 Single load limit curves at anode drive 200 Hz, thermal anode reference power 300W 21
2.7.3 Single and series load rating 21
2.7.4 Filament currents as a function of tube current and tube voltage 22
2.8 Connection diagram 23
2.8.1 Connection diagram Single Source System 23
2.8.2 Connection diagram Dual Source System 24
2.9 Dimensional drawing (incl. reference axis) 25

Copyright © Siemens Healthcare GmbH2020.
Confidential.

SIEMENS Healthcare, P41 , ECM: 706537
10843930 VFT 000 12
Convert date: 2020-08-12T07:22:44 UTC
For signatures see info sheet (appended page)
Document is approved

2.9.1 X-ray tube assembly 25
2.9.2 Single Source Cooling Unit 26
2.9.3 Dual Source Cooling Unit 27

List of Figures 28

List of Tables 29

Copyright © Siemens Healthcare GmbH2020.
Confidential.

SIEMENS Healthcare, P41 , ECM: 706537
10843930 VFT 000 12
Convert date: 2020-08-12T07:22:44 UTC
For signatures see info sheet (appended page)
Document is approved

1 Introduction

This document describes all relevant data, specifications for the system and service documentation for the VECTRON X-ray tube assemblies (10414460,11369880), Single source Cooling Unit (11321261) and Dual Source cooling units (10843990, 11369804).

This document takes into account the general specification for instructions of use according to [1] and the risk analysis [2].

1.1 Purpose of this document

Purpose of the technical master is to export all data to BA CT regarding the system user manual. Changes to this document must be reviewed and approved by BA CT.

1.2 Definitions, acronyms and abbreviations

1.2.1 Definitions

n.a.

1.2.2 Acronyms and abbreviations

Al	Aluminium
BA	Business Area
CFR	Code of Federal Regulations
CT	Computed Tomography
DHHS	Department of Health and Human Services
EMC	Electromagnetic Compatibility
ESD	Electrostatic Discharge
FDA	U.S. Food and Drug Administration
h	hour
hPa	Hectopascal
Hz	hertz
IEC	International Electrotechnical Commission
ISO	International Organization for Standardization
kg	kilogram
kV	Kilovolt
kW	Kilowatt
l	litre
l/min	litre per minute
mA	Milliampere
MHU	Mega heat unit

Copyright © Siemens Healthcare GmbH2020.
Confidential.

SIEMENS Healthcare, P41 , ECM: 706537
10843930 VFT 000 12
Convert date: 2020-08-12T07:22:44 UTC
For signatures see info sheet (appended page)
Document is approved

max	maximum
min	minute
mGy	milli-Gray
mm	millimeter
MJ	Megajoule
n.a.	not applicable
s	second
W	Watt
XTA	X-ray tube assembly
XTC	X-ray tube cooling

1.3 References

[1] content of instruction for Use 10304904_TP_022_A2 AND DEC 01

[2] Risk Analysis 10569413 EGA 000 16

Copyright © Siemens Healthcare GmbH2020.
Confidential.

SIEMENS Healthcare, P41 , ECM: 706537
10843930 VFT 000 12
Convert date: 2020-08-12T07:22:44 UTC
For signatures see info sheet (appended page)
Document is approved

2 Content

2.1 General Data

Type	Model No.		For use with CT System
VECTRON	10843930		Somatom FORCE, 10742326
	Consisting of:		
	X-ray tube assembly VECTRON	10414460	
	Dual source Cooling Unit	10843990	
VECTRON	X-ray tube assembly VECTRON	11369880	Somatom CT System, 11330001
	Single source Cooling Unit	11321261	
VECTRON	X-ray tube assembly VECTRON Dual source Cooling Unit	11369880 11369804	Currently not defined – will be done later at system side

Address for further inquiries	Siemens Healthcare GmbH Technology Centers (TC) Henkestr. 127 91052 Erlangen Germany Phone: +49 9131 / 84-0 siemens-healthineers.com
Legal manufacturer	Siemens Healthcare GmbH Henkestr. 127 91052 Erlangen Germany
Language of original	English

Table 1: General Data

Copyright © Siemens Healthcare GmbH2020.
Confidential.

SIEMENS Healthcare, P41 , ECM: 706537
10843930 VFT 000 12
Convert date: 2020-08-12T07:22:44 UTC
For signatures see info sheet (appended page)
Document is approved

2.2 Laws, standards and regulations

This product has been manufactured and developed in agreement with the following laws, directives and design regulations:

- ISO 13485:2016 Medical devices — Quality management systems
- ISO 14971:2007 Medical devices — Application of risk management to medical devices
- 21 CFR 1020.30 Performance standard for ionizing radiation emitting products, (USA)
- 21 CFR Part 820 Quality System Regulation, (USA)
- International Electrotechnical Commission (IEC), the following standards are considered especially:

IEC	Title
IEC 60336:2005+C1:2006 eq EU: EN 60336:2005	Medical electrical equipment – X-ray tube assemblies for medical diagnosis – Characteristics of focal spots
IEC 60522:2003 eq EU: EN 60522:1999	Determination of the permanent filtration of X-ray tube assemblies
IEC 60601-1:2012+C1:2012 eq EU:EN 60601-1:2006 +AC:2010+A1:2013+ AC:2014	Medical electrical equipment - Part 1: General requirements for basic safety and essential performance
IEC 60601-1-3:2008 / IEC 60601-1-3/ A1:2013 eq EU: EN 60601-1-3:2008 +AC:2010+A11:2016 / EU: EN 60601-1-3/A1:2013	Medical electrical equipment - Part 1-3: General requirements for basic safety and essential performance - Collateral standard: Radiation protection in diagnostic X-ray equipment
IEC 60601-2-28:2017	Medical electrical equipment - Part 2-28: Particular requirements for the basic safety and essential performance of X-ray tube assemblies for medical diagnosis
IEC 60613:2010 eq EU: EN 60613:2010	Electrical and loading characteristics of X-ray tube assemblies for medical diagnosis

Table 2: Laws, Standards and Regulations

Copyright © Siemens Healthcare GmbH2020.
Confidential.

SIEMENS Healthcare, P41 , ECM: 706537
10843930 VFT 000 12
Convert date: 2020-08-12T07:22:44 UTC
For signatures see info sheet (appended page)
Document is approved

2.3 Type Code

The VECTRON X-ray tube assembly (XTA) is the unit consisting of the VECTRON X-ray tube and the protective tube housing.

2.4 Description

The **VECTRON** X-ray tube assembly (XTA) is a high-power X-ray source intended for demanding, high-end Computed Tomography scanner application. Its high power reserve in terms of maximal tube current and operable voltage range in combination with its powerful beam deflection characteristics enable high-end image quality and capabilities in diagnostic imaging.

The **unipolar design** of the **VECTRON** X-ray tube minimizes the high-field zones within the vacuum which substantially improves the electrical robustness of the tube. This setup allows also the usage of a water-propylene-glycol mixture as primary cooling media which ensures high-efficiency cooling of the tube. The housing directs the coolant flow to the thermally high loaded zones of the tube envelope and through the central bore of the liquid metal bearing. This ensures the high performance cooling of the anode thus enabling high power even in long scans e.g. like in perfusion protocols.

The high performance, double sided liquid metal bearing is designed to enable fast gantry rotations up to 4 Hz.

The full metal anode supporting a tungsten-rhenium focal track is designed to enable very small focal spot sizes in combination with high X-ray powers. The advanced magnetic focusing and deflection system allows full control of the electron beam. In combination with the CT scanner 3 different focal spot configurations are preset, however other focal spot configurations are possible.

The large area flat emitter allows for high tube currents up to 1300mA at all operating voltages (unless limited by generator). Scans may be performed in the range of 70 – 150kV.

An advanced Control Electronics monitors constantly tube operation parameters hereby facilitating the novel TubeGuard service by Siemens Healthcare GmbH

The dual source cooling unit (XTC, 10843990 and 11369804) is specially designed for the use in a dual source system. It incorporates two cooling circuits, one for each VECTRON XTA. The single source cooling unit (XTC; 11321261), is specially designed for the use in a single source system.

The functionality of single source and dual source XTCs, is monitored by the Control Electronics of the VECTRON XTA.

Because of the described integrated cooling concept, enforcing a rapid anode cooling, a maximum cooling rate of 2 MJ/min (2.7 MHU/min) can be realized. Therefore, the VECTRON tube exceeds the performance of a conventional 30 MHU tube, where the stored heat is dissipated only by thermal radiation from the anode system.

Copyright © Siemens Healthcare GmbH2020.
Confidential.

SIEMENS Healthcare, P41 , ECM: 706537
10843930 VFT 000 12
Convert date: 2020-08-12T07:22:44 UTC
For signatures see info sheet (appended page)
Document is approved

2.5 Notes (including safety information)

2.5.1 Sustainability

In the interest of complying with legal requirements concerning the environmental compatibility of our products (protection of natural resources, avoidance of waste) we endeavor to reuse components and to return them to the production cycle. We guarantee the functioning, quality and life of these components by taking extensive quality assurance measures including all test procedures, just as for brand new components.

2.5.2 Intended Use and Essential Performance

2.5.2.1 Intended Use

This X-ray tube assembly is intended to be used in whole body X-ray computed tomography scanners

Product decription:
A metallic (e.g., steel, aluminium alloy) case that houses an x-ray tube to provide appropriate limits for x-ray leakage and adequate insulation to avoid electric risks during a diagnostic xray procedure. It includes sheet lead surrounds at appropriate locations to shield unwanted x-ray radiation and collimators near the aperture; it is usually filled with oil to prevent electrical arcs from the high-voltage components of the x-ray tube. The housing also includes attachment points, cooling means, high-voltage cables, and supports for the tube and cable receptacles. It may be an independent unit mounted in a tube support, or under a fluoroscopic table as a component of a radiographic system.

Information with regard to intended users:
X-ray tube housing assemblies are intended to be integrated into diagnostic X-ray systems by a system integrator, for whom it is required to have specific technical and medical knowledge and skills, including but not limited to radiation protection, electrical and mechanical safety and clinical procedures for which the finalized system is released. Integrated into the diagnostic X-ray system, X-ray tube housing assembly are intended to be operated by adequately trained clinical users. Instructions for use of these devices address exclusively the system integrator and are not intended being handed over to the clinical operators. All information and advices for the clinical operator are to be included in the instruction for use and accompanying documents of the finished diagnostic X-ray system in which the X-ray tube housing assembly is integrated.

2.5.2.2 Essential Performance

Following IEC 60601-2-28:2017, an X-ray tube assembly has no essential performance.
Note: 201.4 General requirements, Clause 4 of the general standard applies, except as follows: 201.4.3 Essential Performance

Addition:
The entity X-ray tube assembly itself does not have essential performance. Whether characteristics of an X-ray tube assembly shall be considered essential performance, depends on the X-ray system and high-voltage generator characteristics combined with the X-ray tube assembly.

Copyright © Siemens Healthcare GmbH2020.
Confidential.

SIEMENS Healthcare, P41 , ECM: 706537
10843930 VFT 000 12
Convert date: 2020-08-12T07:22:44 UTC
For signatures see info sheet (appended page)
Document is approved

2.5.3 Safety information

The X-ray tube assembly may be operated only in agreement with the safety information of this operator manual. The system owner is responsible for compliance with the regulations that apply for the installation and operation of an X-ray system.

- The use of the X-ray tube assembly (10414460) and X-ray tube cooling (10843990) is approved only in the following SIEMENS Healthcare GmbH system: Somatom FORCE (10742326). It may not be connected with assemblies, components or systems other than those recommended by SIEMENS Healthcare GmbH.
- The use of the X-ray tube assembly (11369880) and X-ray tube cooling (11321261) is approved only in the following SIEMENS Healthcare GmbH system: Somatom CT System (11330001). It may not be connected with assemblies, components or systems other than those recommended by SIEMENS Healthcare GmbH.
- The X-ray tube assembly and the X-ray tube cooling shall be used only in compliance with its intended purpose; the directions of the operating instructions of the system manufacturer for operation, servicing and care as well as maintenance of an X-ray system apply. In particular, the tube assembly is not approved for operation in environments with combustible gas mixtures.
- Use of the X-ray tube assembly and X-ray tube cooling is forbidden if signs of mechanical, electrical or radiation-related defects are present.
- For monitoring certain operating parameters, the X-ray tube assembly and X-ray tube cooling is equipped with means for preventing a possible overload of or damage to the X-ray tube assembly and X-ray tube cooling. Any manipulation to these safety devices is prohibited. The load limit values listed in this manual may not be exceeded.
- For safety reasons the X-ray tube assembly may be replaced only by the service personnel of the manufacturer or by personnel trained by the manufacturer.
- Connect the system ground corresponding to the instructions of the system manufacturer.

hm_um_tube_limits

WARNING

Usage of X-ray tube with values beyond limiting values!

Usage of X-ray tube beyond limiting values may cause injury (burns) or death.

♦ Limiting values for usage of the X-ray tube must not be exceeded.

Copyright © Siemens Healthcare GmbH2020.
Confidential.

SIEMENS Healthcare, P41 , ECM: 706537
10843930 VFT 000 12
Convert date: 2020-08-12T07:22:44 UTC
For signatures see info sheet (appended page)
Document is approved

hm_um_grounding

WARNING

Risk of electric shock!

Wrong installation may cause serious physical injury or death.

- To avoid the risk of electric shock, this equipment must only be connected to a supply with protective earth.

hm_um_no_disconnected_cables_with_power

WARNING

Risk of electric shock!

Disconnected cables result in accessible voltages. This may cause serious physical injury or death.

- This equipment may only be operated, when all electrical connectors are installed completely.

Cleaning and Disinfection

This product does not require sterilization.

Radiation protection

This product fulfills the requirements of IEC 60601-1-3:2008/A1:2013, as well as FDA 21 CFR 1020.30.

This X-ray tube assembly emits X-ray radiation in operation. Only correspondingly qualified and trained personnel are therefore allowed to operate the X-ray tube assembly.

Operating conditions

Before the initial start-up of the X-ray tube assembly and X-ray tube cooling or after a prolonged downtime period, proceed according to the instructions of the service documents of the system manufacturer.

Refer to section “Technical data” for the operating conditions.

Electromagnetic Compatibility (EMC)

Radio signals of radio-frequency communication devices such as mobile telephones or other mobile radio devices can influence the correct functioning of a medical electrical device.

This X-ray component is subject to special precautionary measures with regard to EMC and may be installed and put into operation only according to the installation instructions.

All cables necessary for the connection are provided by SIEMENS Healthcare GmbH. No other cables may be used. Correct functioning cannot be guaranteed if accessories other than the components sold by SIEMENS Healthcare GmbH are used. The compliance with the requirements of IEC 60601-1-2 with regard to electromagnetic compatibility is validated in the CT system.

This medical electrical component cannot be operated on its own, but only in combination with the above named radiological diagnostic system.

Therefore please refer to the operator manual of the X-ray system for all data, guidelines and manufacturer's declarations on electromagnetic emission.

Copyright © Siemens Healthcare GmbH2020.
Confidential.

SIEMENS Healthcare, P41 , ECM: 706537
10843930 VFT 000 12
Convert date: 2020-08-12T07:22:44 UTC
For signatures see info sheet (appended page)
Document is approved

Maintenance

The X-ray tube assembly is maintenance free. There are no hazards whatsoever for persons and environment in the case of proper use.

Disposal

The X-ray tube assembly as well as the tube contains materials such as oil and heavy metals for which environmentally friendly and proper disposal in accordance with the valid national legal regulations must be assured. Disposal as domestic or industrial refuse is forbidden. The manufacturer possesses the required technical knowledge and will take the tube assembly back for disposal. Please contact your Siemens Healthcare GmbH Customer service for this purpose.

This proceeding is also valid for the XTC.

hm_um_taking_back_components

CAUTION

Wrong disposal

Risk of pollution and contamination of the environment.

- The manufacturer possesses the required technical knowledge and will take the tube assembly back for disposal.

Instructions to service personnel

General ESD (Electrostatic Discharge) directives must be complied with when handling the system.

NOTE: When unpacking the XTA from transport package, check, that the unit has reached a surface temperature of at least 15°C.

Copyright © Siemens Healthcare GmbH2020.
Confidential.

SIEMENS Healthcare, P41 , ECM: 706537
10843930 VFT 000 12
Convert date: 2020-08-12T07:22:44 UTC
For signatures see info sheet (appended page)
Document is approved

2.5.4 Labels and pictograms on the x-ray tube assembly housing and cooling unit

Label	Meaning
	A pictogram as warning sign for hot surfaces is located on the housing of XTA and XTC.
	Protective earth symbols are affixed on the tube assembly housing and cooling unit.
	Functional earth symbol is affixed on the tube assembly housing.
	Label TÜV-Süd is affixed on the tube assembly housing
	Revision Label is affixed on the tube assembly housing and XTC 10843990
X2	Label X2 is affixed at Stator on the tube assembly housing 11369880, 10414460 and also on XTC 11321261 housing for connector
	Label Factory default switch is affixed on the tube assembly housing (11369880, 10414460)
	Label HS-Polarity is affixed on the tube assembly housing (11369880, 10414460)
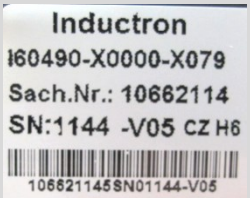	Label Stator is affixed on the tube assembly housing (11369880, 10414460)
X3	Label X3 is affixed on the tube assembly housing 10414460
X1	Label X1 at XTC 11321261 housing for connector

Figure 1: Labels and Pictrograms

Copyright © Siemens Healthcare GmbH2020.
Confidential.

SIEMENS Healthcare, P41 , ECM: 706537
10843930 VFT 000 12
Convert date: 2020-08-12T07:22:44 UTC
For signatures see info sheet (appended page)
Document is approved

Label	Meaning
	Identification Label X-ray tube assembly – VECTRON used in CT System 10742326
	Identification Label X-ray tube assembly – VECTRON 11369880
	Identification Label VECTRON X-Ray Tube
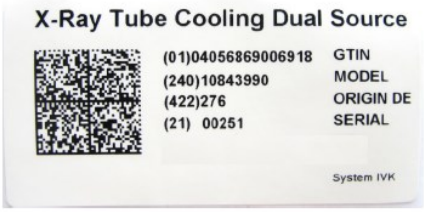	Identification Label cooling unit - XTC impaCT Dual Source 10843990
	Identification Label cooling unit - XTC impaCT Single Source 11321261
	Identification Label cooling unit - XTC impaCT Dual Source 11369804
	DHHS Label at XTA 10414460, 11369880

Figure 2: Identification and DHHS Labels

Copyright © Siemens Healthcare GmbH2020.
Confidential.

SIEMENS Healthcare, P41 , ECM: 706537
10843930 VFT 000 12
Convert date: 2020-08-12T07:22:44 UTC
For signatures see info sheet (appended page)
Document is approved

2.5.5 Location of Labels

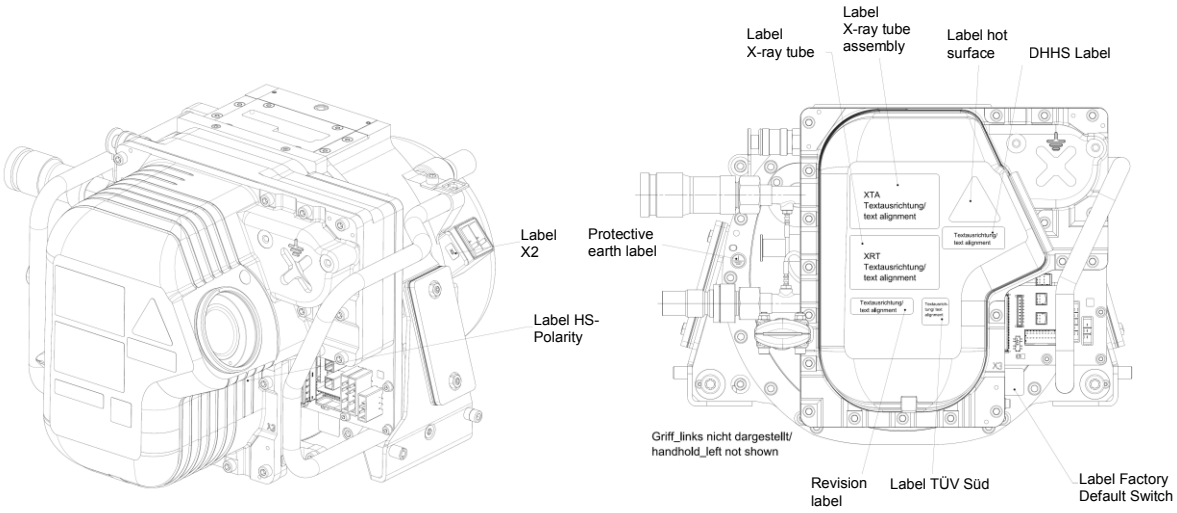

Figure 3: Location of Labels XTA 10414460 and 11369880

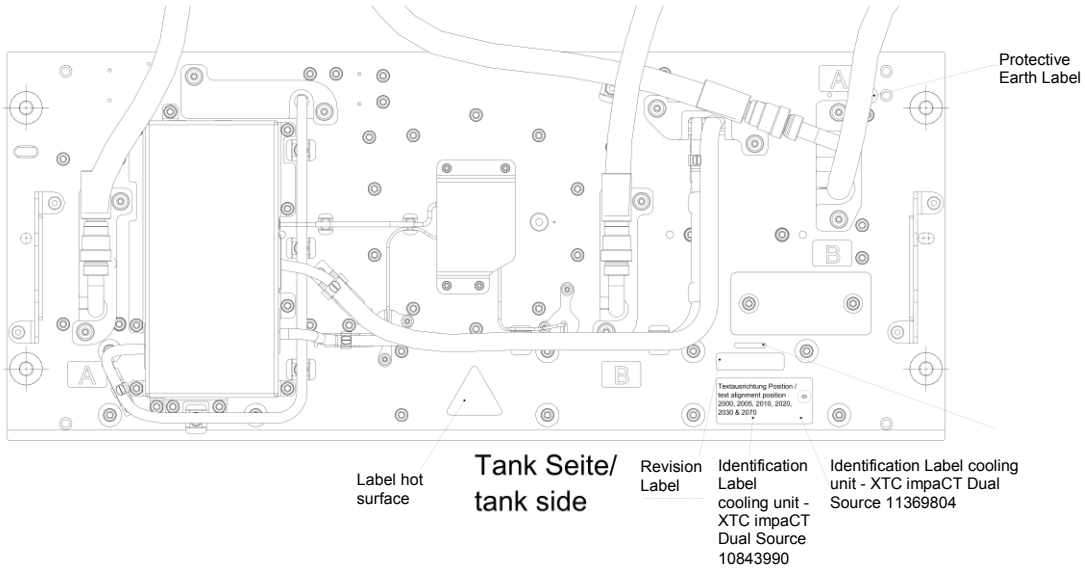

Figure 4: Location of Labels XTC 10843990 and 11369804

Copyright © Siemens Healthcare GmbH2020.
Confidential.

SIEMENS Healthcare, P41 , ECM: 706537
10843930 VFT 000 12
Convert date: 2020-08-12T07:22:44 UTC
For signatures see info sheet (appended page)
Document is approved

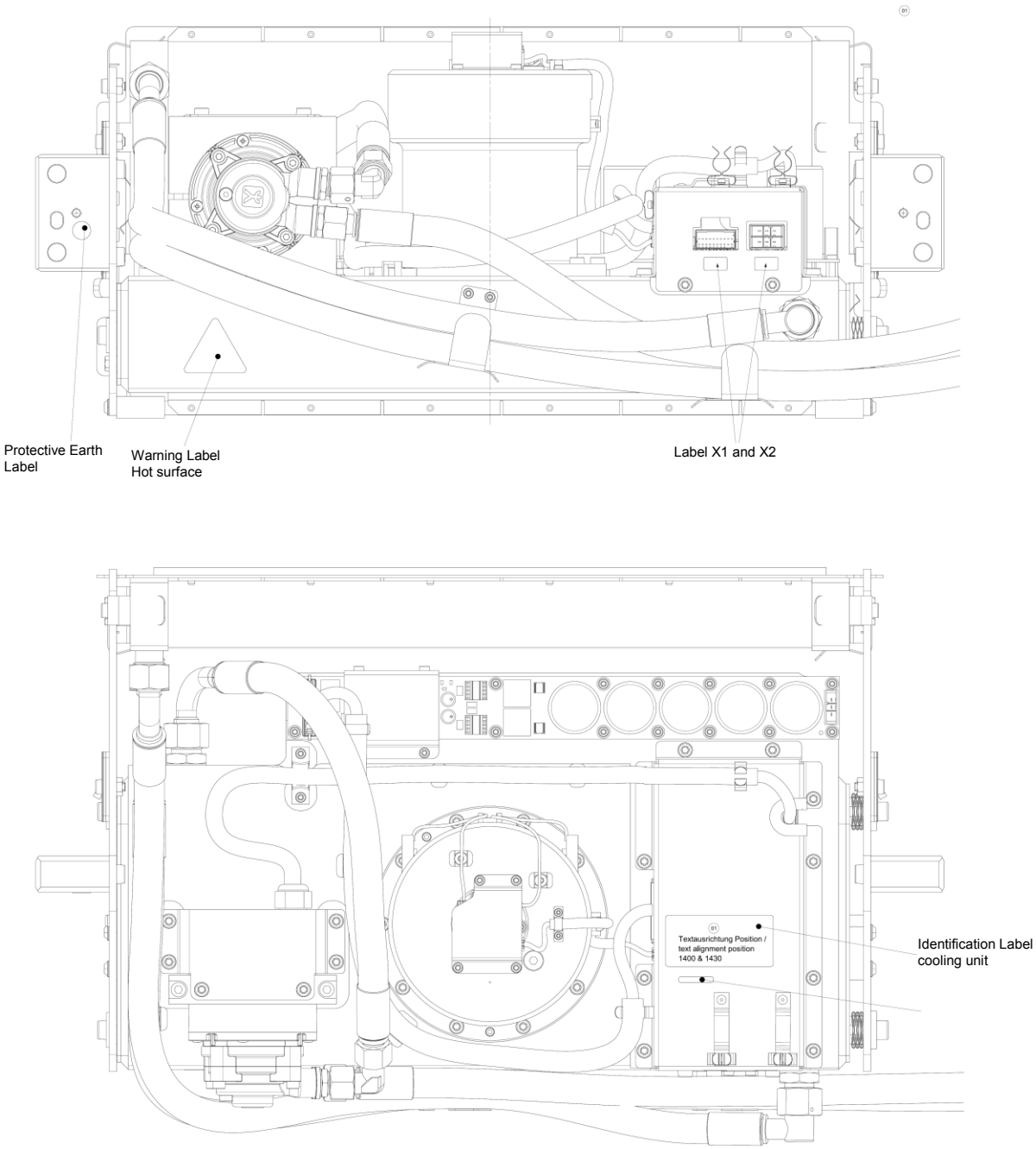

Figure 5: Location of Labels XTC 11321261

Copyright © Siemens Healthcare GmbH2020.
Confidential.

SIEMENS Healthcare, P41 , ECM: 706537
10843930 VFT 000 12
Convert date: 2020-08-12T07:22:44 UTC
For signatures see info sheet (appended page)
Document is approved

2.6 Technical data

Data corresponding to IEC 60601-2-28:2017

2.6.1 X-ray tube

Property	Specification			Standard
Nominal anode input power at thermal anode reference power 300W	small focus 28 kW	medium focus 60 kW	large focus 120 kW	IEC 60613:2010
Nominal CT anode input power	120 kW			IEC 60613:2010
Nominal CT scan power index	24kW	47kW	69kW	IEC 60613:2010
Envelope voltage	0 kV			IEC 60613: 2010
Envelope current	100 % (at all operating currents and voltages)			IEC 60613: 2010
Anode input power (continuous) Continuous anode input power	4.6 kW*			IEC 60613:2010
Target material	tungsten rhenium			n.a.
Single and series loadrating	see 2.7.1 and 2.7.3			IEC 60613:2010
Nominal x-ray tube voltage	150 kV			IEC 60613:2010
Cathode emission characteristics	see 2.7.4			IEC 60613:2010
Anode angle (in relation to reference axis)	8°			n.a.
Anode drive frequency	max. 200 Hz			n.a.

Table 3: Technical Data X-Ray tube

* Limited by the cooling capacity of the CT system.

Copyright © Siemens Healthcare GmbH2020.
Confidential.

SIEMENS Healthcare, P41 , ECM: 706537
10843930 VFT 000 12
Convert date: 2020-08-12T07:22:44 UTC
For signatures see info sheet (appended page)
Document is approved

2.6.2 X-ray tube assembly

Property	Specification	Standard
Heating and cooling curves	see 2.7.1	n.a.
Maximum continuous heat dissipation Nominal continuous input power	4600 W (> 10 min) 8000 W (10 min) 13000 W (4 min)	IEC 60613:2010
Reference axis	see 2.9	n.a.
Focus	small medium large 	n.a.
Nominal focal spot value (in relation to reference axis)	small 0.4 x 0.5 medium 0.6 x 0.7 large 0.8 x 1.1	IEC 60336:2005 C1:2006
permanent filtration of X-ray tube assembly	≥ 5.7 mm Al / 150 kV	IEC 60522:2003
Leakage radiation at 150kV / 4.6kW at 1m distance	< 0.8 mGy / h	IEC 60601-1-3:2008 +A1:2013
Protection class	I Type B	IEC 60601-2-28:2017
Weight (without additional components)	65,6 kg	n.a.
High-voltage connection: unipolar	single pole / unipolar	n.a.
Rotating-anode motor	3-phase stator phase voltage 330V_{pp} – 750 V_{pp} phase current ≤ 25 A_{rms} (cotinuous) phase current ≤ 40 A_{rms} (≤ 60 sec)	n.a.

Table 4: Technical Data X-Ray tube assembly

2.6.3 Cooling unit (XTC)

Property	Specification	Standard
Cooling medium	water (56%) / propylene-glycol(44%)-mixture	n.a.
Flow rate (normal mode)	≥ 10 l/min	n.a.
Coolant quantity Dual Source	8.2l	n.a.
Coolant quantity Single Source	6,8 l	n.a.
Weight dual source 11369804	44,9 ± 0,03 kg	n.a.
Weight dual source 10843990	44,7 ± 0,1 kg	n.a.
Weight single source 11321261	38 ± 0,1 kg	n.a.

Table 5: Technical Data Cooling Unit

Copyright © Siemens Healthcare GmbH2020.
Confidential.

SIEMENS Healthcare, P41 , ECM: 706537
10843930 VFT 000 12
Convert date: 2020-08-12T07:22:44 UTC
For signatures see info sheet (appended page)
Document is approved

2.6.4 Operation, transport and storage conditions

	Operation	Transport and storage
Permissible ambient temperature for 11321261	From +18°C to +28°C	From -20°C to + 50°C
Cooling Air Loop Temperature for 11369804, 10843990	From +17°C to +25°C	n.a.
Permissable ambient temperature for 11321261; 11369804, 10843990	n.a.	From -20°C to + 50°C
Permissible ambient temperature for 10414460, 11369880	From +18°C to +45°C	From -20°C to + 50°C
Relative air humidity for 10843930	From 20% to 80%	From 5% to 90%
Relative air humidity for 11369804, 11321261	From 20% to 75%	From 5% to 95%
Relative air humidity for 11369880	From 20% to 75%	From 5% to 90%
Barometric pressure	From 800 hPa to 1060 hPa	From 700 hPa to 1060 hPa

Table 6: Operation, storage and transport conditions

2.7 Load charts

2.7.1 Anode heating and cooling curve

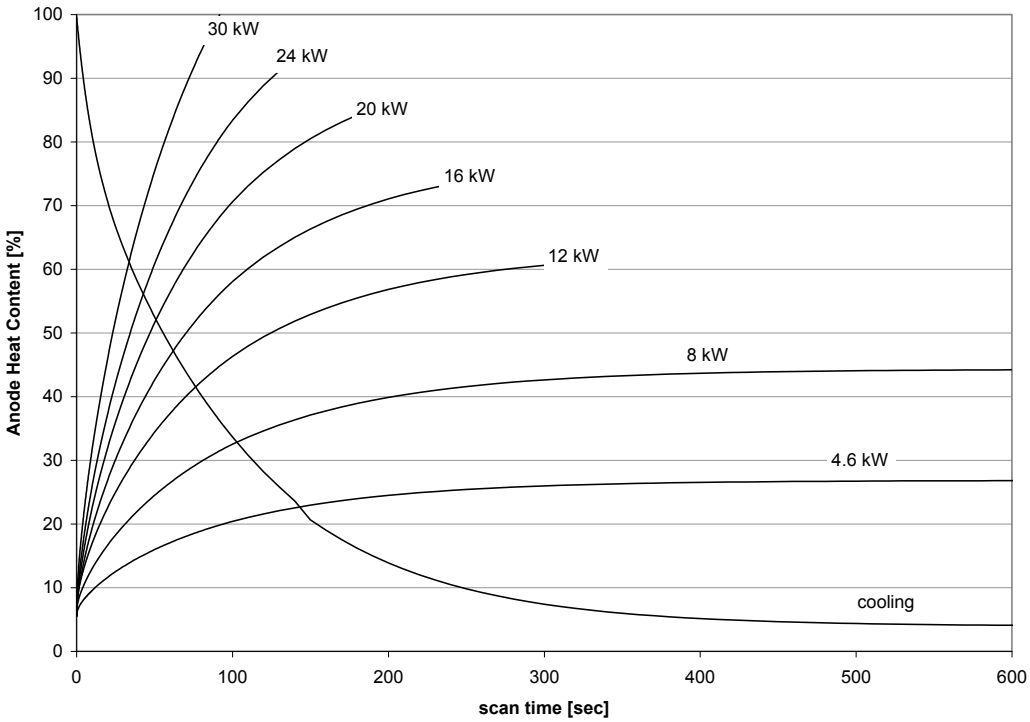

Figure 6: Anode heating and cooling curve

Copyright © Siemens Healthcare GmbH2020.
Confidential.

SIEMENS Healthcare, P41 , ECM: 706537
10843930 VFT 000 12
Convert date: 2020-08-12T07:22:44 UTC
For signatures see info sheet (appended page)
Document is approved

2.7.2 Single load limit curves at anode drive 200 Hz, thermal anode reference power 300W

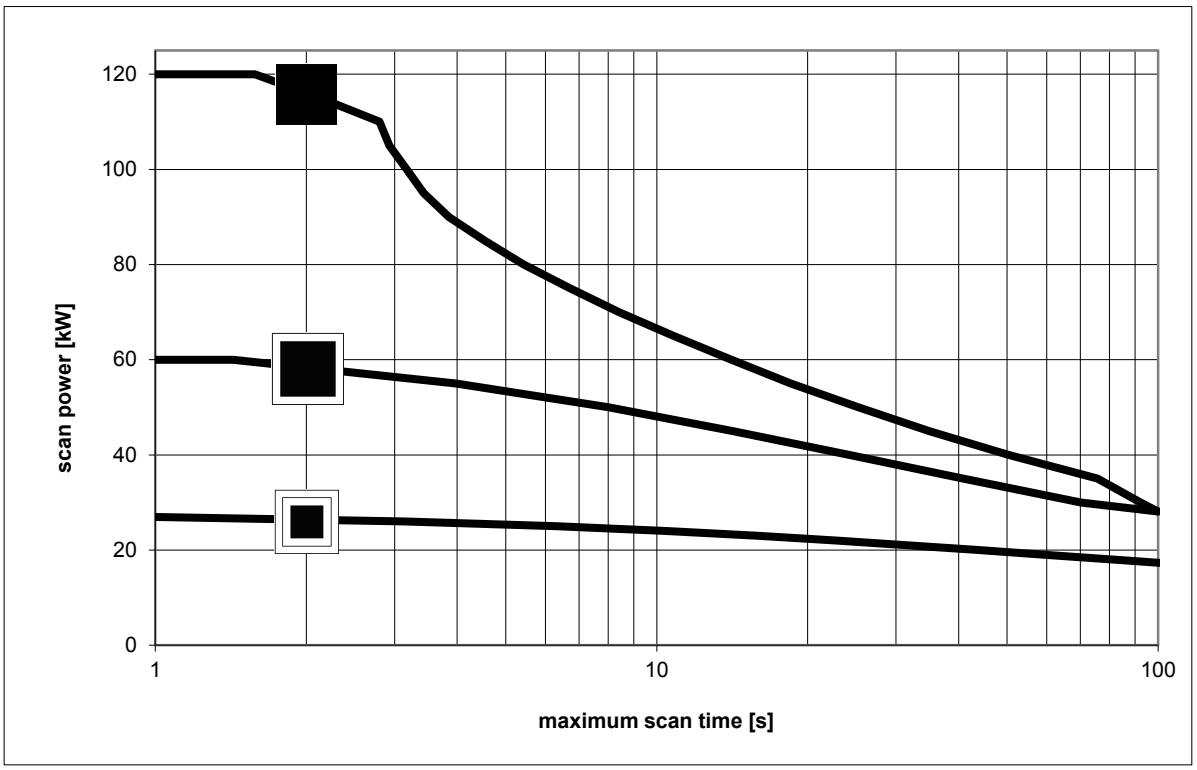

Figure 7: Single load limit curve – limited by system

2.7.3 Single and series load rating

Maximum possible load for one spiral scan within 10 minutes at a thermal anode reference power of 300 W and an anode drive frequency of 195 Hz Anode 1200°C

According to: IEC 60613:2010

One spiral scan			
	small	medium	large
Spiral time **[s]**	Pmax **[kW]**	Pmax **[kW]**	Pmax **[kW]**
4	25,2	54,9	100,3
10	24,1	48,1	71,1
20	22,4	41,8	56,6
30	21,3	37,9	49,4
50	19,5	33,1	36,9
70	18,4	30,0	30,3
100	17,3	27,3	26,3

Table 7: Single load rating

Copyright © Siemens Healthcare GmbH2020.
Confidential.

SIEMENS Healthcare, P41 , ECM: 706537
10843930 VFT 000 12
Convert date: 2020-08-12T07:22:44 UTC
For signatures see info sheet (appended page)
Document is approved

Max. possible load for three spiral scans using large focus within 10 minutes (with 10 second pause between the single spirals) at a thermal anode reference power of 300W and an anode drive of 195 Hz Anode 1200°C

Three spiral scans	
Single spiral time **[s]**	Pmax **[kW]**
10	52,8
20	31,2
30	25,0
40	22,6
50	21,3
70	19,8
100	18,7

Table 8: Serial load rating

2.7.4 Filament currents as a function of tube current and tube voltage

According to: IEC 60613:2010

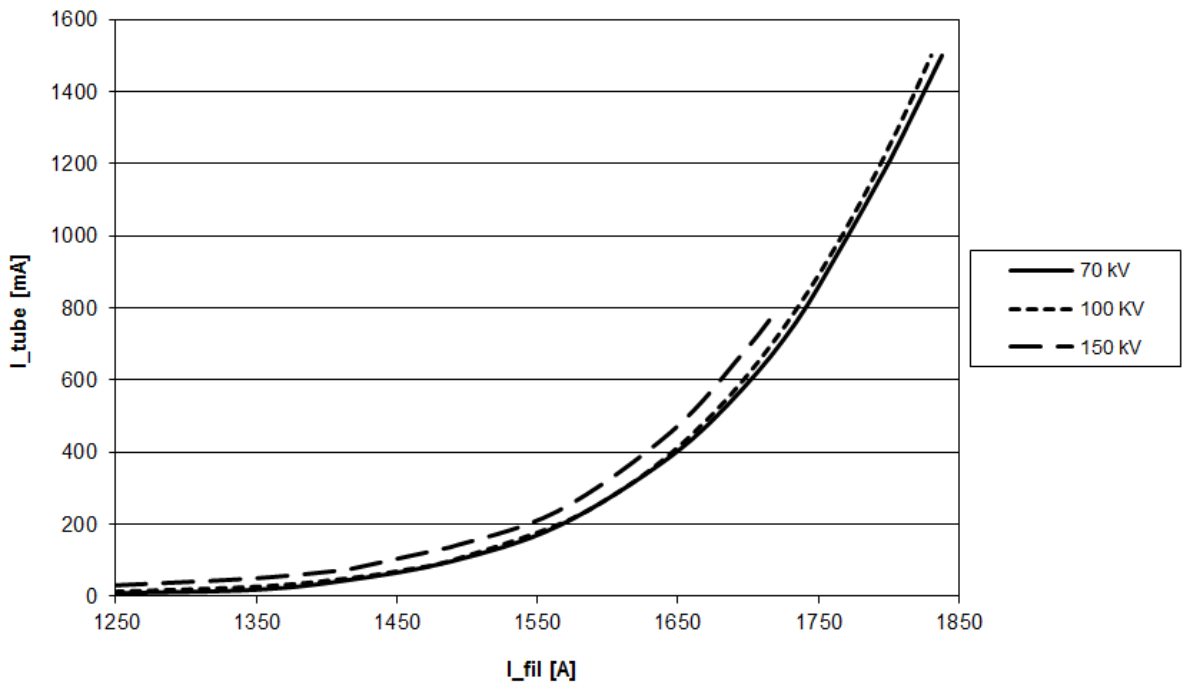

Figure 8: Filament currents as a function of tube current and tube voltage

NOTE: the shown filament currents may deviate by +/- 5% depending on the individual filament characteristic.

Copyright © Siemens Healthcare GmbH2020.
Confidential.

SIEMENS Healthcare, P41 , ECM: 706537
10843930 VFT 000 12
Convert date: 2020-08-12T07:22:44 UTC
For signatures see info sheet (appended page)
Document is approved

2.8 Connection diagram

2.8.1 Connection diagram Single Source System

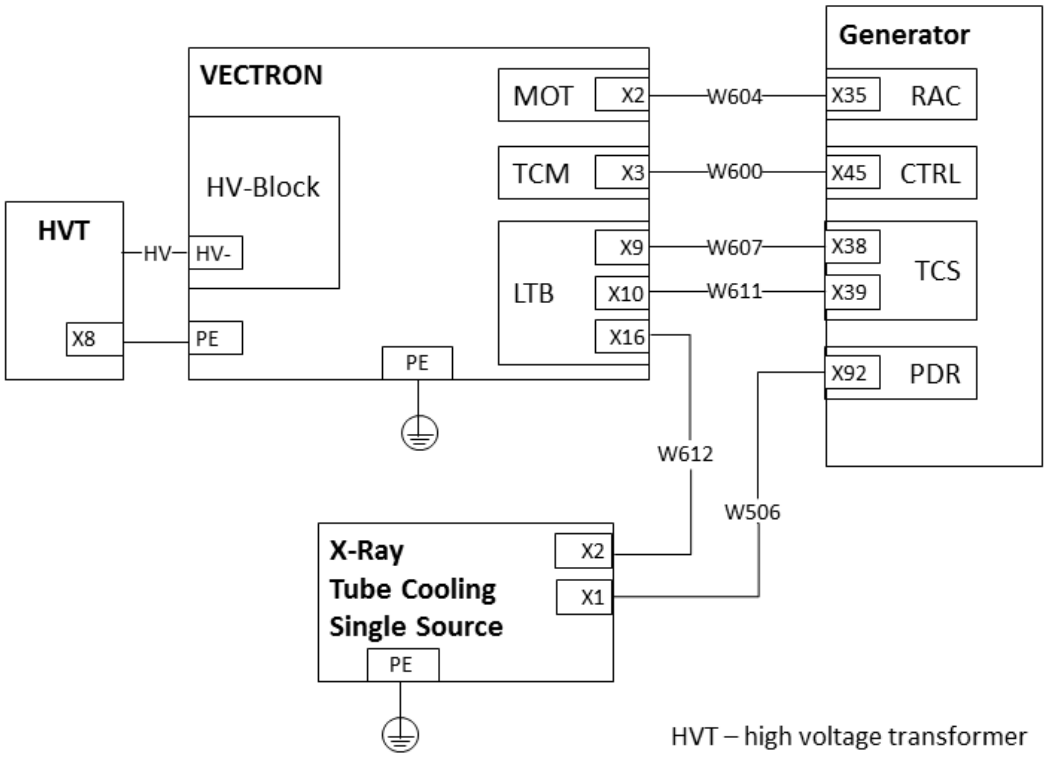

Figure 9: Connection diagram Single Source System

Copyright © Siemens Healthcare GmbH2020.
Confidential.

SIEMENS Healthcare, P41 , ECM: 706537
10843930 VFT 000 12
Convert date: 2020-08-12T07:22:44 UTC
For signatures see info sheet (appended page)
Document is approved

2.8.2 Connection diagram Dual Source System

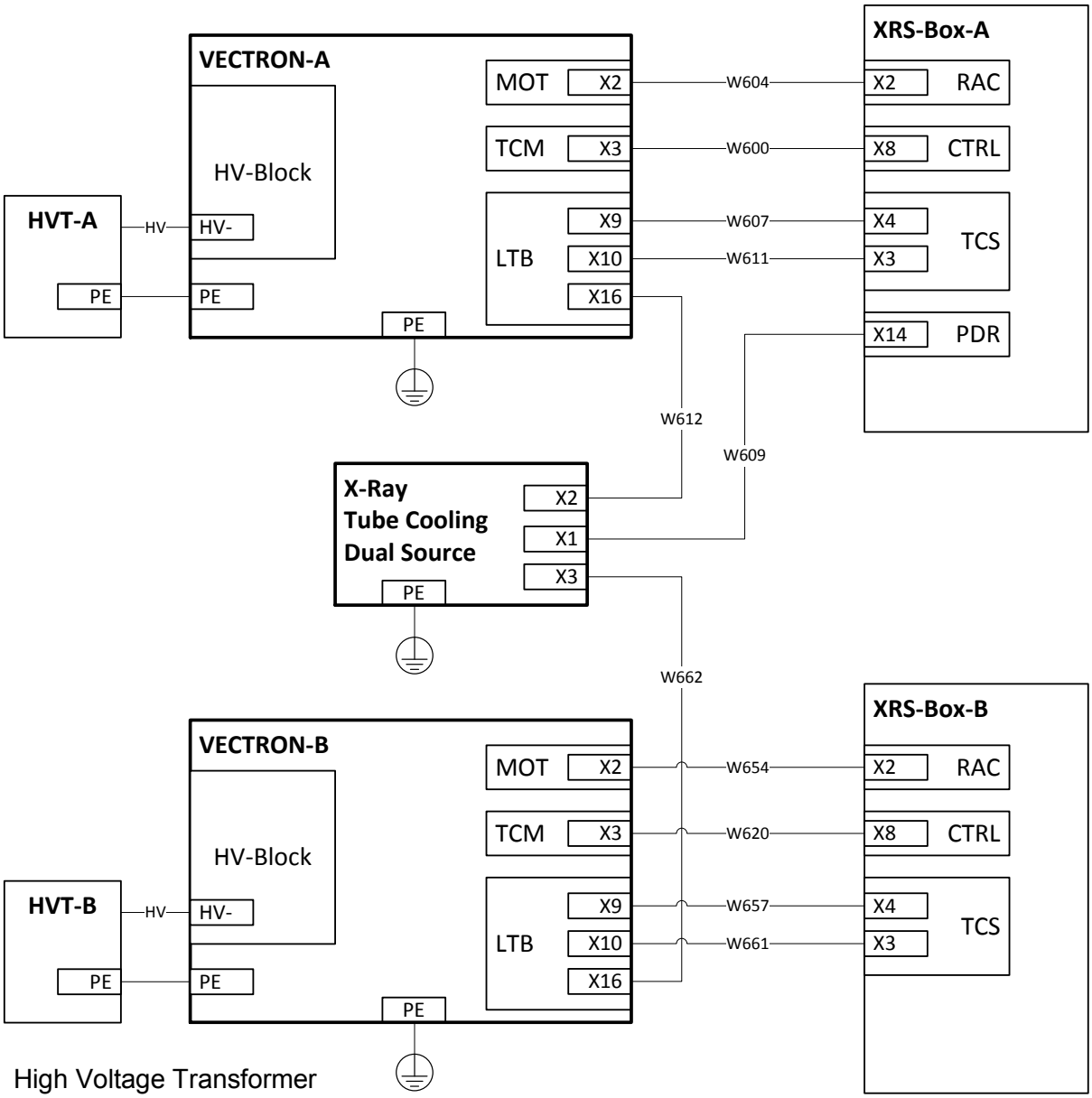

Figure 10: Connection diagram Dual Source System

Copyright © Siemens Healthcare GmbH2020.
Confidential.

SIEMENS Healthcare, P41 , ECM: 706537
10843930 VFT 000 12
Convert date: 2020-08-12T07:22:44 UTC
For signatures see info sheet (appended page)
Document is approved

2.9 Dimensional drawing (incl. reference axis)

2.9.1 X-ray tube assembly

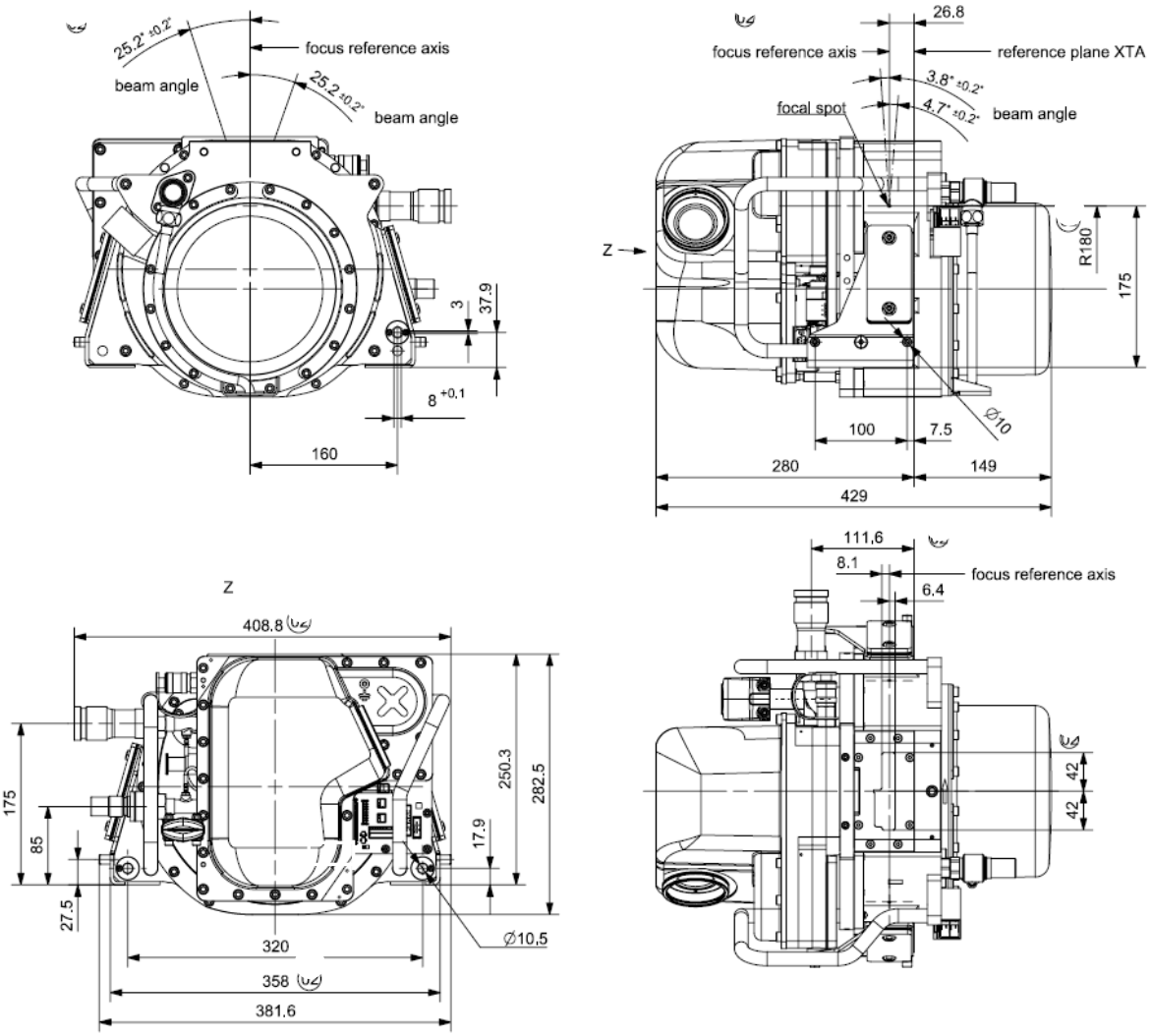

Figure 11: Dimensional Drawing XTA (Dimensions in mm. All dimensions are approximate.)

Copyright © Siemens Healthcare GmbH2020.
Confidential.

SIEMENS Healthcare, P41 , ECM: 706537
10843930 VFT 000 12
Convert date: 2020-08-12T07:22:44 UTC
For signatures see info sheet (appended page)
Document is approved

2.9.2 Single Source Cooling Unit

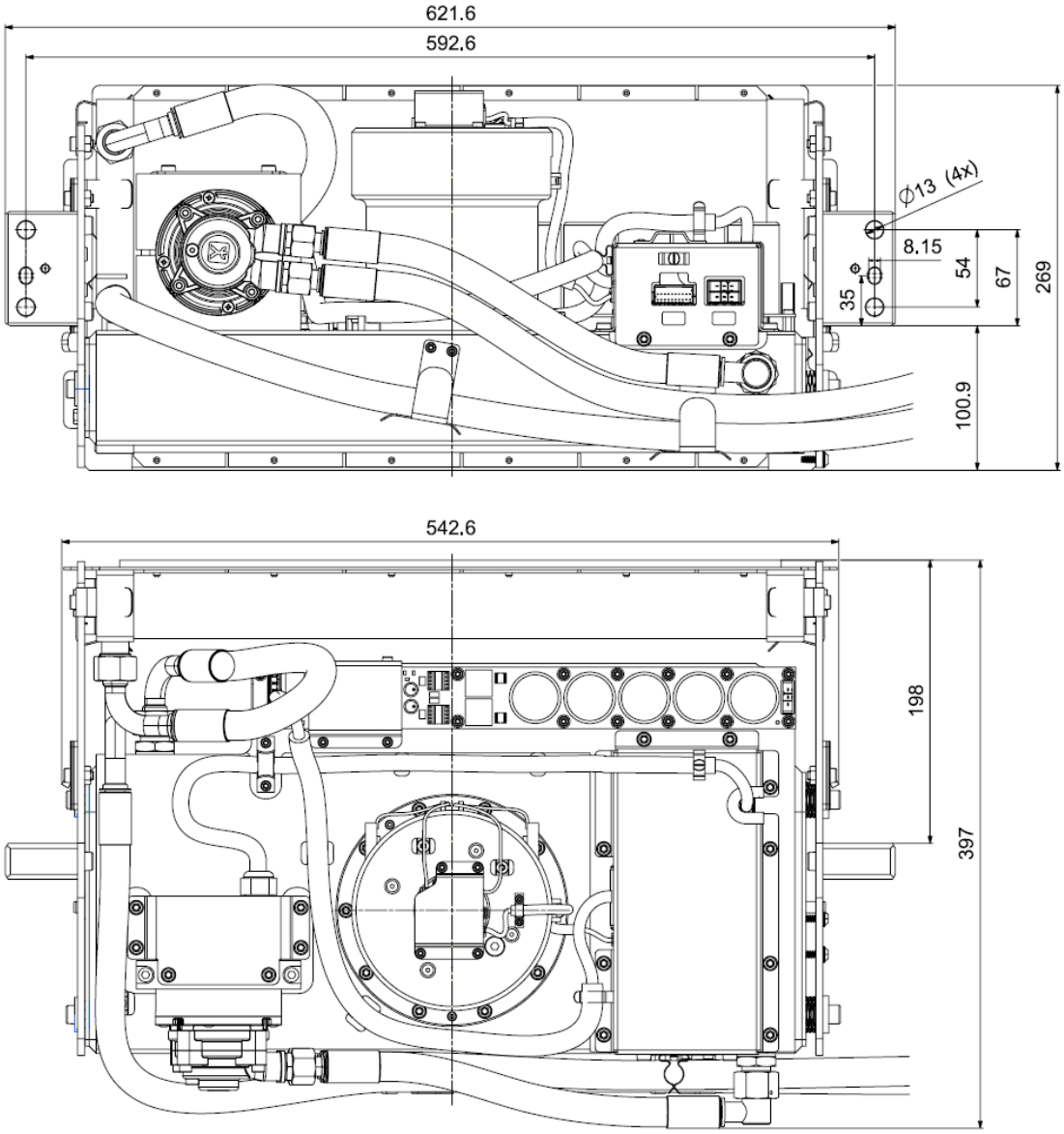

Figure 12: Dimensional Drawing Single Source Cooling Unit (Dimensions in mm. All dimensions are approximate)

Copyright © Siemens Healthcare GmbH2020.
Confidential.

SIEMENS Healthcare, P41 , ECM: 706537
10843930 VFT 000 12
Convert date: 2020-08-12T07:22:44 UTC
For signatures see info sheet (appended page)
Document is approved

2.9.3 Dual Source Cooling Unit

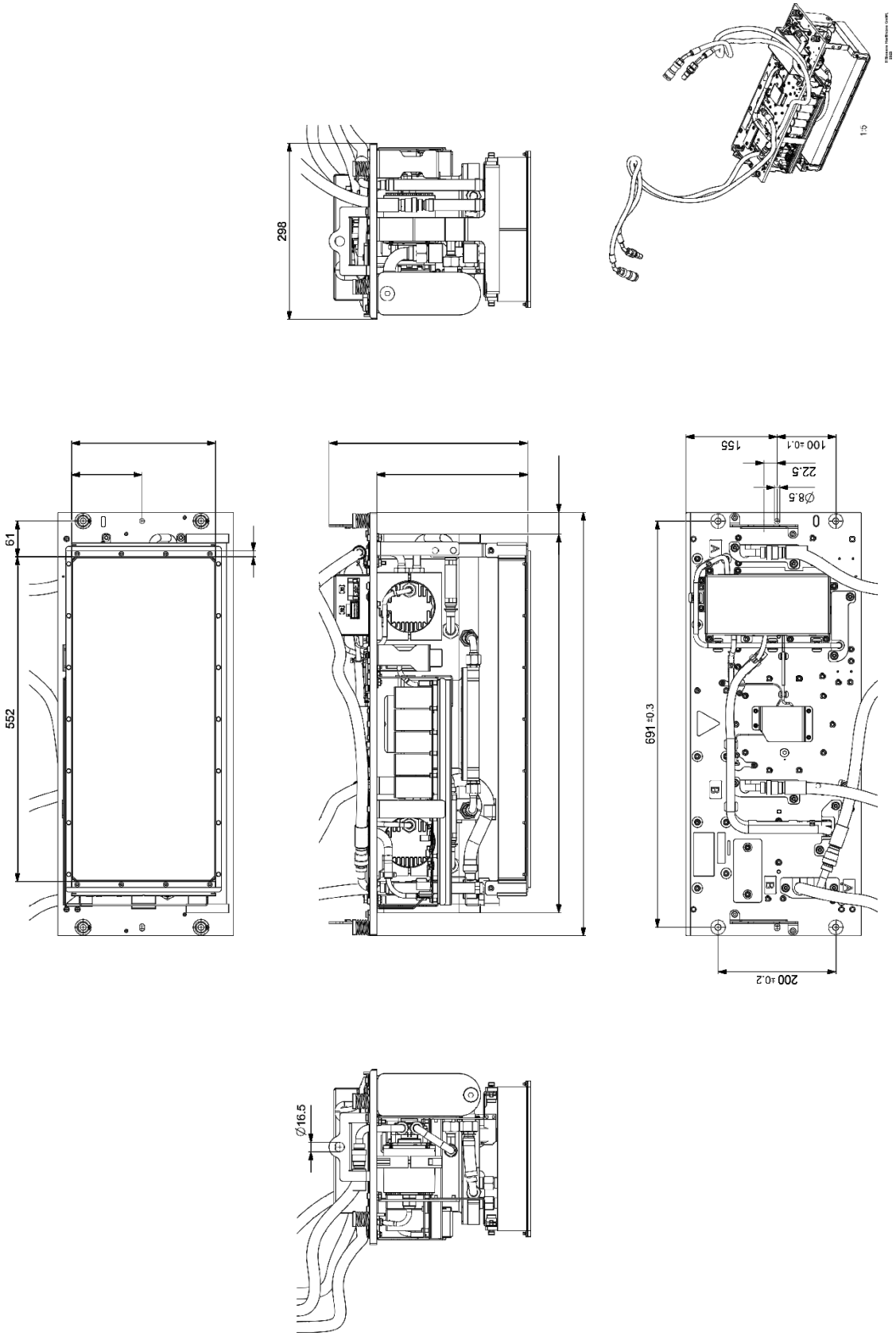

Figure 13: Dimensional Drawing Dual Source Cooling Unit (Dimensions in mm. All dimensions are approximate.)

Copyright © Siemens Healthcare GmbH2020.
Confidential.

SIEMENS Healthcare, P41 , ECM: 706537
10843930 VFT 000 12
Convert date: 2020-08-12T07:22:44 UTC
For signatures see info sheet (appended page)
Document is approved

List of Figures

Figure 1: Labels and Pictrograms 14
Figure 2: Identification and DHHS Labels 15
Figure 3: Location of Labels XTA 10414460 and 11369880 16
Figure 4: Location of Labels XTC 10843990 and 11369804 16
Figure 5: Location of Labels XTC 11321261 17
Figure 6: Anode heating and cooling curve 20
Figure 7: Single load limit curve – limited by system 21
Figure 8: Filament currents as a function of tube current and tube voltage 22
Figure 9: Connection diagram Single Source System 23
Figure 10: Connection diagram Dual Source System 24
Figure 11: Dimensional Drawing XTA (Dimensions in mm. All dimensions are approximate.)25
Figure 12: Dimensional Drawing Single Source Cooling Unit (Dimensions in mm. All dimensions are approximate) 26
Figure 13: Dimensional Drawing Dual Source Cooling Unit (Dimensions in mm. All dimensions are approximate.) 27

Copyright © Siemens Healthcare GmbH2020.
Confidential.

SIEMENS Healthcare, P41 , ECM: 706537
10843930 VFT 000 12
Convert date: 2020-08-12T07:22:44 UTC
For signatures see info sheet (appended page)
Document is approved

List of Tables

Table 1: General Data 7
Table 2: Laws, Standards and Regulations 8
Table 3: Technical Data X-Ray tube 18
Table 4: Technical Data X-Ray tube assembly 19
Table 5: Technical Data Cooling Unit 19
Table 6: Operation, storage and transport conditions 20
Table 7: Single load rating 21
Table 8: Serial load rating 22

Copyright © Siemens Healthcare GmbH2020.
Confidential.

SIEMENS Healthcare, P41 , ECM: 706537
10843930 VFT 000 12
Convert date: 2020-08-12T07:22:44 UTC
For signatures see info sheet (appended page)
Document is approved

This document has been created using CVBook VA02A.
Für dieses Dokument wurde CVBook VA02A verwendet.

Template 10304959_PLM_T01 AND E00 07

Copyright © Siemens Healthcare GmbH 2020. Confidential.

- generated automatically by SAP system **P41** -

Appendix to Document: **10843930 VFT 000 12 , ECM: 706537**
Sheet generated at : **2020-08-12T08:05:49 UTC**
Originator : **SIEMENS Healthcare, P41**
Signatures related to this document and performed in SAP:

Meaning	UTC date and time	surname, given name of signee
AUTHOR	**2020-08-12T07:24:46**	**Moeller, Nicole**
APPROVAL	**2020-08-12T08:05:04**	**Bernhardt, Jens**
REVIEW	2020-07-09T07:00:59	Hellfritsch, Bernd
REVIEW	2020-07-10T08:18:03	Noack, Jana
REVIEW	2020-07-30T07:45:31	Gubo, Matthias
REVIEW	2020-08-11T09:40:55	Hellfritsch, Bernd
REVIEW	2020-08-11T11:01:08	Gubo, Matthias
REVIEW	2020-08-11T12:05:17	Noack, Jana
REVIEW	2020-08-11T14:24:08	Gebert, Bernhard