# Securing Keyless Entry Systems in Modern Cars from Relay and Replay Attacks using Two-Way Authentication

*Alaparthi Vinith[1], Vempalli Sai Nikhil[2], Ankit Kumar[3], Gursharan Singh[4]*

[1,2,3]Student, Department of Computer Science and Engineering, Lovely Professional University Phagwara, Punjab 144411, India

[4] Associate Professor, Department of Computer Science and Engineering, Lovely Professional University Phagwara, Punjab 144411, India

E-Mail:vinitha2053@gmail.com, vempallisainikhil@gmail.com, ak045106@gmail.com, Gursharan.dhot@gmail.

## Abstract

Modern cars are equipped with Remote Keyless Entry (RKE) or Passive Keyless Entry and Start (PKES) systems, which provide a convenient way for users to access their vehicles. However, these keyless entry systems have also become vulnerable to cyber attacks, specifically relay and replay attacks. Such attacks can allow unauthorized access to the car's interior and disable security features, creating a serious safety threat. To effectively address replay and relay attacks, the proposed system utilizes a two-way authentication process that verifies the legitimacy of both the smart phone and the car's key fob during the authentication procedure. The proposed system utilizes a smart phone to retrieve the GPS location and timestamp of the user's device, enabling precise verification of their location at a particular moment. Additionally, we suggested an app on smart phone which can provide the features like locking the car when of no use and also help the car's owner to effectively manage users who can use the car. We also suggested backup ways to access the car when the user misplaces either the smart phone or the key fob. The working of the proposed mechanism is analyzed through informal security analysis.

**Key words:** Remote Keyless Entry (RKE), Passive Keyless Entry and Start (PKES), relay and replay attacks, cyber attacks.

## I. INTRODUCTION

Keyless entry systems (KES) are becoming increasingly popular due to their convenience and security advantages over traditional physical keys. The keyless entry system is more convenient for the driver as it does not require physical key to unlock the doors. Additionally, keyless entry systems are less vulnerable to physical key copying, which was a common method used by car thieves to break into vehicles. There are two main types of keyless entry systems: remote keyless entry (RKE) and passive keyless entry and start (PKES). In RKE, the driver uses a remote-control key fob to unlock the doors by transmitting a unidirectional signal to the receiver in the vehicle. In PKES, the vehicle detects the key fob within certain proximity and uses a bidirectional communication system to authenticate the key fob and allow the driver to unlock the doors and start the engine. Then, various automated commands are executed after authentication is successful. PKE is considered more secure than RKE because it uses encryption to prevent unauthorized access. In 2010, a relay attack on passive keyless entry and start (PKES) systems was demonstrated by two colluding adversaries working together to extend the range of RF communication between a vehicle and its key fob. As a result, vehicle doors were unlocked, highlighting vulnerabilities in the security mechanisms of keyless entry systems. [1]

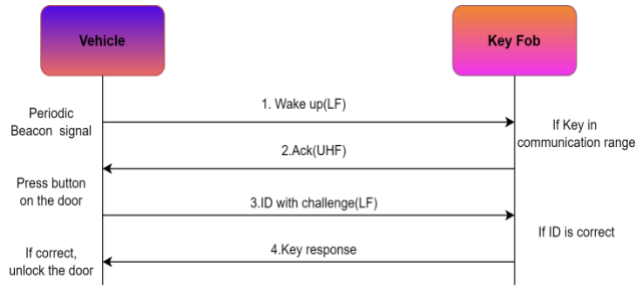


**Figure 1: Message flow of PKES system**

**Figure 2: Message flow of RKE system**

Wireless access to buildings and vehicles can be granted through Remote Keyless Entry (RKE) systems, which utilize remote control technology. However, these systems are at risk of being compromised by replay attacks, as noted in source. Attackers can intercept RF signals and replay them to gain unauthorized entry. Although RKE systems have improved over time, many are still vulnerable. Rolling-code RKE systems are more secure than fixed-code systems because they use a random number generator to generate new codes that are synchronized between the transmitter and receiver. However, these systems can still be vulnerable to replay attacks due to a security flaw in the re-synchronization method. To bypass the security of the

Electronic copy available at: https://ssrn.com/abstract=4502119

RKE system attackers can jam the signal and replay the code. Manufacturers must continue to improve the security of their RKE systems to prevent unauthorized access. [2]

The Passive Keyless Entry System (PKES) is a sub-type of Remote Keyless System (RKE) that uses an electronic remote control as a key for locking and unlocking a car. The demand for convenience and innovation in the automobile industry has led to the development of PKES, which has become the forefront of the latest technologies in the industry. However, the increased price of high-valued cars has led to increased security concerns, as they are vulnerable to attacks such as relay attacks, replay attacks, vehicle impersonation, and challenge forward prediction attacks. The main issue with prevalent PKES systems is the lack of computational power in the key fob and the absence of an appropriate mechanism to generate complex keys and update system software from time to time. Automobile companies need to address these security concerns and improve the PKES system to provide better security for their customers. [3]

## II. RELATED WORK

Several researches have focused on identifying and addressing vulnerabilities in keyless systems and come up with several solutions for detection and defense of an attack. Some discussed attack surfaces in cars including remote keys and developed a security-by-design framework [4]. The researcher surveyed attacks on connected and autonomous vehicles and the defense techniques available. A third study specifically focused on remote key entry and Bluetooth vulnerabilities across different car models. Some researchers also classified the vulnerabilities and discussed various defense methods for connected and autonomous vehicles. [5]

Several Studies have highlighted security issues in keyless systems and presented various attacks against keyless entry systems, including attacks against rolling code based RKE systems. The study analyzed the Hitag-2 algorithm-based RKE and showed that keys can be extracted from Hitag-2[6].And different attack surfaces in cars are discussed. Remote car attacks including RKE system for different car models. The experts performed an against the RKE systems on six different car models. All these studies point to the need to harden security in RKE systems.

In the field of vehicle security, there exist different techniques for authenticating the correct use of keys for a particular vehicle [7]. Some of the commonly used techniques are fixed code, Rolling code, and Challenge-Response Technique. There are different variations to this technique, such as starting from the same seed in both RKS and carrying out a certain operation on the value of the counter or using an internal counter that has a sequence of codes. In modern devices, the code is usually encrypted before its transmission, and there are RKS that invalidate all codes below the received code to prevent future unauthorized access. Challenge-Response Technique uses a shared encryption key between the sending device and the receiver, and the sender must respond with an encrypted message that the receiver compares to verify the key's authenticity.

To enhance security in RKE systems, taxonomy of attacks and defenses on autonomous vehicles is proposed and presents a radio frequency fingerprinting method for detecting malicious requests [8]. An authentication protocol for RKE systems using a symmetric encryption algorithm, and introduces the Ultimate KeeLoq technology, which uses a running timer to prevent replay attacks [9]. Another research utilizes authentication method using timestamps and XOR encoding to prevent replay attacks and finally, presents an authentication scheme for RKE systems using asymmetric cryptographic techniques. [10]

The PKES system uses a transceiver module to constantly detect the key fob’s presence and communicates with it via unique IDs and commands to authenticate and execute the lock or unlock command [11]. The authentication process ensures that only authorized key fobs can interact with the car. PKES is a valuable addition to the automotive industry, providing a seamless and secure way for users to access their vehicles. As technology continues to evolve, it is essential to develop and implement robust security measures to ensure the safety and security of car owners and their vehicles. Though keyless entry systems provide convenience to car owners, they are not without security risks.

Although several researchers define biometric systems as a new approach for KES as recognition systems that use unique features to identify or verify an individual's identity in a created database [12]. The paper highlights the limitations of existing

Electronic copy available at: https://ssrn.com/abstract=4502119

security systems in smart vehicles and suggests the integration of biometric systems as an automated process to provide an extra layer of security. Even though, the study's author also references a previous study that highlights various biometric technologies that can be used to enhance automobile security.

In several more studies, researcher implemented encryption algorithms to enhance security and prevent replay attacks, while another study highlighted that encryption alone is insufficient for authentication and suggested the need for additional security layers[13][14][15]. Even cryptography methods can improve security; they should be used alongside other security measures to provide a comprehensive approach to vehicle security.

# III. METHODOLOGY

## Assumptions

The proposed system assumes that the signals communicated between the car and key fob are transmitted through a secure medium and properly encrypted by using strong encryption techniques.

## Proposed System model

The proposed system relies on GPS information from the user's smart phone along with the time stamp as the core element of authentication. This allows for a highly secure and convenient way for users to access and start their cars, with the minimum requirement of key fob. In the proposed system, the car will continuously search for the user's smart phone through Bluetooth to connect. If the user comes close to the car, then it will try to establish a connection with the car. Once the smart phone is connected then car will validate its authenticity by sending a challenge message which was different from the one used between key fob and car and then validate the response by smart phone.

Then the car checks the GPS along with time stamp obtained by the smart phone. If both car and smart phone are close to each other at that time then the car to send a wake up message to activate the key fob. Before this even if the person is having a key fob cannot enter the car as the authentication of the smart phone is the primary source, the signal from key fob is validated only after the smart phone is validated. In this system the authentication is done by using both the key fob and smart phone which allows the user to access car securely. In simple words the user needs both key fob and smart phone to enter the car.

## Role of key fob

The key fob will receive wake up message from the car after the user's smart phone is authenticated. Then the car verifies the key fob. In addition to this we included a feature to allow the user to access the car when smart phone is lost. If the user's smart phone is lost then user needs to authenticate to use the key fob before sending a signal to the car which indicates the user smart phone is lost. The smart lock is included in the key fob which authenticates the user. This authentication can be done by using the pin number set by user before or finger print sensor on the key fob. After the authentication the key fob will send a unique signal to the car which indicates the smart phone is lost. This signal also contains the time stamp which ensures that these signals can't be replayed by the attackers. Using this signal the verification of the GPS location of the smart phone is skipped. This is used as a backup option to authenticate the user in the case of lost smart phone.

## Role of smart phone

The smart phone's authentication process involves using an installed app, which the user of the car must download and register with a unique username and password. Once the app is properly installed it will take care of the authentication part in which smart phone is involved to allow the user accessing the car. This app requires the active internet connection to check if the user changes the password through the official website. To use the app the user need to set a pin to access the features in the app. The app asks the login credentials to login, pin to access some important features of app.

The owner of the car is provided with the administrative privileges. So that he can add or delete the list of users who can have access to the car through this app. So the family members of the user and friends can use this car by authenticating them by using the same app on their mobile according to the will of cars original owner. This app also provides a feature that allows users to lock or unlock the car using smart phone to restrict the access to their car when it's not being used. By using the locking

Electronic copy available at: https://ssrn.com/abstract=4502119

and unlocking of car provided in the app, the user can restrict the access to the car when he is busy with some other work. This will prevent anyone from accessing the car, even if they have both the user's smart phone and key fob.

In case the user lost the key fob then user uses his smart phone to access the car. Here the user login to the app using his login credentials and uses his pin to access the feature of lost key fob. Once the feature is enabled the smart phone itself performs the functions of the key fob as several automobile industries are providing a feature of using the smart phones in absence of the key fob. So by this feature the user can access the car without key fob.

If the smart phone is lost then user must change his login credentials by logging into the official website to stop accessing the car with lost smart phone. If incase the key fob is lost then the user can access the feature lost key fob which allows accessing the car without the key.

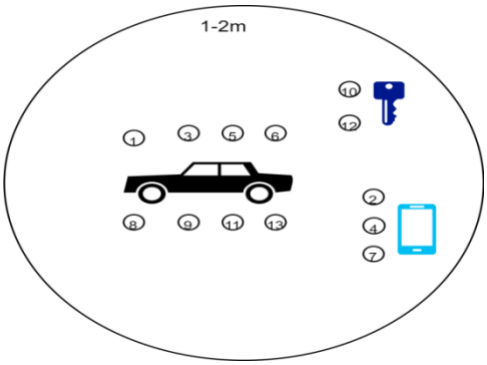


**Figure 3: verification process in proposed system**

1. Car searches for user's smart phone
2. Smartphone connected via Bluetooth
3. Car sends challenge message to smart phone
4. Smart phone responds to challenge message
5. Car checks the response of smart phone
6. If response is valid then car request for GPS location along with time stamp from smart phone
7. Smart phone sends the GPS location of smart phone along with time stamp
8. Car checks GPS location and time stamp send by smart phone
9. If smart phone's GPS location is near to car at that time then car sends wake up message
10. Key fob receives the request and returns ACK
11. Car receives the ACK returned by key fob and transmits the challenge code.
12. Key fob respond to the challenge code
13. If response is correct then car will unlock

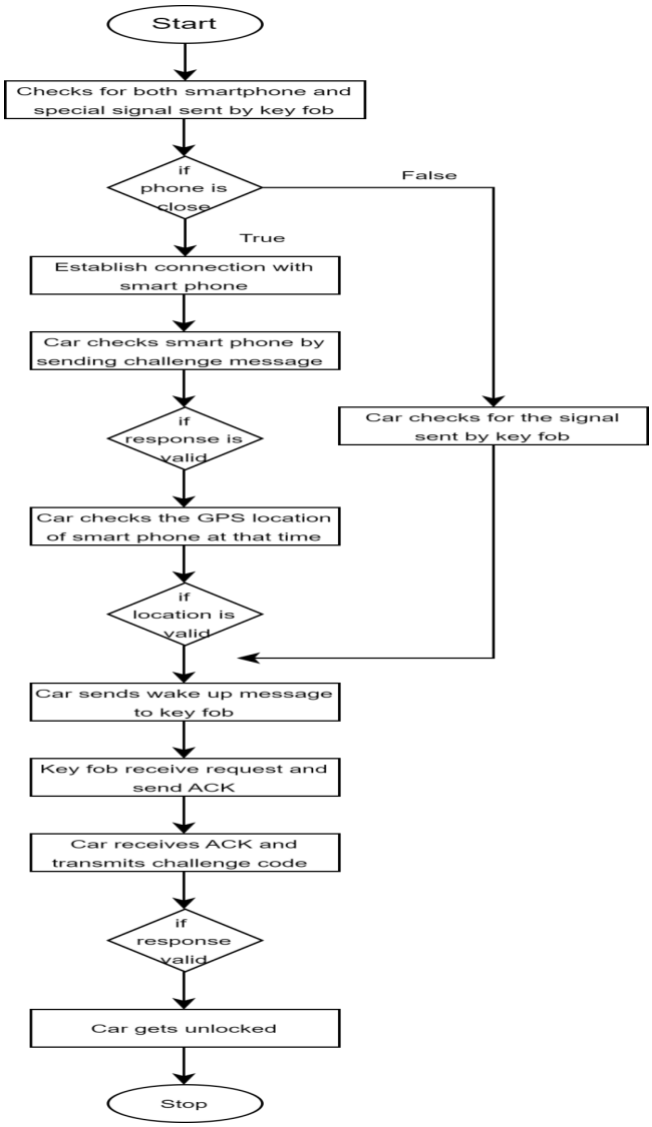


**Figure 4: flow of messages in proposed system**

## IV. RESULTS AND DISCUSSION

The proposed system attempts to introduce the two ways authentication in the RKE and PKES used in the modern cars to increase the security without affecting the ease of existing system. The user can access the car in three ways which include the

Electronic copy available at: https://ssrn.com/abstract=4502119

normal use where the user uses both smart phone and the key fob along with the backup options to deal with the situation where the user lost either of smart phone or key fob. The user is allowed to access the car by using smart phone alone. In this case the user need to login to the app with his credentials. The app checks weather the username and password is changed by user through the official website or not before allowing user to access the features of app. This ensures that no one else can use user's lost smart phone to gain access to the car. Then user can access the feature by entering the pin number which helps user to access car without key fob. There is also provides a provision to access the car with the key fob alone by sending a special signal. The chances of relay or replay attacks are less because this signals are not used frequently as it is a back up designed to deal with the situation where the user's smart phone is lost.

## Informal Security Analysis

In the relay attacks the attacker try to relay the signal of the key fob which is not possible here as the car search and connect with the smart phone first. So for breaking into the system the attacker need to relay both the signals of the key fob and smart phone together. If the attacker wants to relay the signal from the smart phone then the GPS verification come in play. The GPS verification ensures the car to verify the exact location of the smart phone before searching for the key fob.

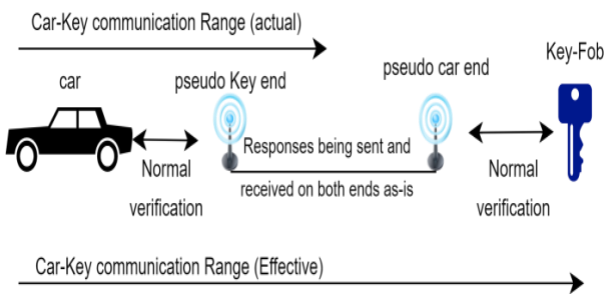


**Figure 5: relay attack**

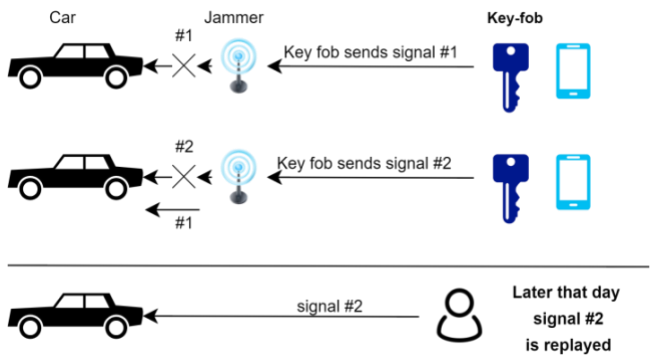


**Figure 6: replay attack**

Similarly, in the replay attacks the attacker try to replay the signal of the key fob which is not possible here as the car search and connect with the smart phone first. So for breaking into the system the attacker need to replay both the signals of the key fob and smart phone together. If the attacker wants to replay the signal from the smart phone then the timestamp verification come in play. The timestamp verification ensures the car to verify the exact time at which the smart phone is trying to establish a connection with the car before searching for the key fob. This shows that the proposed system can increase security in the keyless entry systems by effectively deal with relay and replay attacks.

## Performance Evaluation

The proposed system utilizes a combination of a smart phone and key fob for user authentication. The ease of using keyless entry system is not affected. As long as the user has both the smart phone and key fob, there is no need for any human intervention to complete the authentication process. While it enhances security by preventing relay and replay attacks, it may also increases the authentication time due to the higher number of messages exchanged. The accuracy of the authentication process relies on the GPS system of the smart phone. It is assumed that all transmitted authentication signals are properly encrypted, as any vulnerability in this could enable attackers to tamper the signals in between, which further makes all other security measures ineffective. Considering the financial aspect, this system doesn't need any maintenance once it is properly setup by developing an app to manage user authentication in smart phone and doing necessary changes in the existing system.

## V. CONCLUSION

As relay and replay attacks are the most common types of attacks that target the Remote keyless entry systems (RKE) used in modern cars, we propose a system which uses a two-way authentication process that verifies both the smart phone and the

Electronic copy available at: https://ssrn.com/abstract=4502119

car's key fob during authentication. In this system the car uses a smart phone to retrieve the GPS location and timestamp, which is necessary for verifying the exact location of the user's smart phone at a particular moment. Our system also includes the authentication procedure for the user who lost his smart phone or key fob to access the car. In addition, we suggest an app for managing car users, lock or unlock car and to access the car without the key fob. Informal security analysis is used to demonstrate how the proposed system can increase the security in Remote keyless entry systems effectively. The technology is evolving faster and the modern vehicles are constantly evolving by using the advance technology to give the user more convenience and the safety. This gives scope to the attackers to launch attacks on the modern vehicles. There will no system which guarantees the complete protection to the vehicle in all the cases. The attacker will continue to find their new ways to break in to the cars system and exploit them. So the constant research and development is needed in the area of automotive cyber security to effectively deal with the attacks on the modern day vehicles.

## VI. REFERENCES


1. A. Francillon, B. Danev, and S. Capkun, “Relay attacks on passive keyless entry and start systems in modern cars,”https://www.research-collection.ethz.ch /bitstream/handle/20.500.11850/42365/eth-4572-01.p df
2. D. F. Oswald, “Wireless attacks on automotive remote keyless entry systems,” http://doi.acm.org /10.1145/2995289.2995297
3. “Smart Key” https://en.wikipedia.org/wiki/Remote_ keyless_system#Smart_key
4. M. Pham and K. Xiong, “A survey on security attacks and defense techniques for connected and autonomous vehicles,” https://www.sciencedirect .com/science/article/abs/pii/ S0167404821000936
5. X. Sun, F. R. Yu, and P. Zhang, “A survey on cyber-security of connected and autonomous vehicles (cavs),”https://ieeexplore.ieee.org/document/9447840
6. K. Greene, D. Rodgers, H. Dykhuizen, K. McNeil, Q. Niyaz, and K. A. Shamaileh, Timestamp-based defense mechanism against replay attack in remote keyless entry systems. https://ieee xplore.ieee.org /abstract/document/9043039?casa_token=M-LBUIL DPlMAAAAA:PfKv58OqleQsGQEMnr_aFA9WDR IIjUlAFpyYBX8byI8yCBVebyCZ0kdw1IqUPU3280tInqubBbufZfA
7. H.-l. LIU and J. Wetzel, “Security analysis of remote keyless entry systems for vehicles”. http://hdl. handle.net /2183/32035
8. R. P. Parameswara and B. Sikdar, "An Authentication Mechanism for Remote Keyless Entry Systems in Cars to Prevent Replay and RollJam Attacks"https://ieeexplore.ieee.org/document/982726
9. Cristian Toma, “Ultimate KeeLoq technology” http://ww1.microchip.com/downloads/cn/AppNotes/cn569448.pdf
10. R. P. Parameswara and B. Sikdar, "A PUF-based Lightweight and Secure Mutual Authentication Mechanism for Remote Keyless Entry Systems". https://ieeexplore.ieee.org/abstract/document/10001217
11. A. D. Naik, R. Vibhu, U. P. Saboji, V. R. M, N. S and P. B. Honnavalli, "An Android-Based Multifactor Authentication for Securing Passive Keyless Access System," https:// ieeexplore.ieee.org /abstract/document/9824254
12. B. -M. Balaban, I. Ș. Sacală, A. C. Petrescu-Niță and F. Pop, "Cyber-Physical Systems - A New Approach For Keyless Entry Systems" https://ieeexplore.ieee.org/abstract/document/9481015?casa_token=Mchng_WC88AAAAAA:G017vFs8veu2obbaTK3bAO1D5eLt5Vww7fuoIKbBBTx0hD-v8LO0eQCsehzrT10 2hjdTV3O-BtLeUk
13. Poolat, P.R.; Biplab, S. “An Authentication Mechanism for Remote Keyless Entry Systems in Cars to Prevent Replay and RollJam Attacks” https ://ieeexplore.ieee.org/abstract/document/9827256
14. Madhumitha, S.S.; Rohini, P.; Arunkumar, R.; Gunasekaran, “Effective Cryptography Mechanism for Enhancing Security in Smart Key System” https ://ieeexplore.ieee.org/abstract/document/8939095
15. Kyungho, Joo, Wonsuk Choi, Dong Hoon Lee, “Hold the Door! KES” https://arxiv.org/abs/2003.13251


Electronic copy available at: https://ssrn.com/abstract=4502119