Discovery of High-Energy-Density Battery Materials via Physics-Informed Neural Networks

David G. Puga, Dr. Kun Wang

Inamori School of Engineering, *Alfred University, Alfred, NY 14802, USA*

Abstract

The advancement of energy storage technologies is critically dependent on the accelerated discovery of novel materials. This study presents a computational framework for the high-throughput screening of battery cathode materials, leveraging a Physics-Informed Neural Network (PINN) to predict volumetric energy density (VED). The model was trained on a curated dataset of 29,377 compounds from the Materials Project. On a held-out test set, the PINN demonstrated exceptional predictive fidelity, achieving a coefficient of determination (R^2) of 0.9989, a Mean Absolute Error of 0.3 Wh/L, and a Root Mean Square Error of 0.4 Wh/L. This high-accuracy model enabled the screening of 500,000 hypothetical compositions in under 15 minutes. A physics-constrained generation strategy, which restricted the search to validated chemical spaces such as high-nickel NMC and high-voltage spinels, proved highly effective; 100% of the generated candidates fell within the target VED range of 150–250 Wh/L. The screening identified a Co-doped spinel as a top candidate with a predicted VED of 238.2 Wh/L. These results underscore the efficacy of integrating physical constraints within deep learning frameworks to accelerate materials discovery.

1. Introduction

The global transition toward a sustainable energy infrastructure necessitates significant advances in electrical energy storage, particularly for applications in electric vehicles and grid stabilization (Armand & Tarascon, 2008). The cathode material, which largely dictates the capacity and voltage of a battery, remains a central focus of research and development.

However, the discovery-to-deployment timeline for new materials is notoriously slow. Conventional experimental approaches, guided by chemical intuition and trial-and-error, are resource-intensive and often require more than a decade to bring a new material to market.

In response, the materials science community has increasingly turned to high-throughput computational screening. First-principles methods like Density Functional Theory (DFT) have become invaluable for accurately predicting the properties of materials before they are synthesized (Persson, 2016). Initiatives such as the Materials Project have leveraged DFT to compute and catalog the properties of tens of thousands of inorganic compounds, creating a rich dataset for *in silico* materials design. Despite its power, the computational cost of DFT remains a significant bottleneck, rendering it impractical for exhaustively screening the near-infinite chemical space of all possible material compositions.

Machine learning (ML) offers a compelling path to overcome this limitation. By training on existing DFT data, ML models can learn complex structure-property relationships and subsequently predict properties for new candidate materials millions of times faster than direct quantum mechanical calculations (Ward et al., 2016; Schmidt et al., 2019). A critical evolution of this paradigm is the Physics-Informed Neural Network (PINN), which embeds domain-specific physical principles directly into the learning process. Unlike "black-box" models that may make physically unrealistic predictions, PINNs are constrained by fundamental laws, enhancing their accuracy, data efficiency, and ability to generalize to unseen chemical spaces (Raissi et al., 2019).

This communication details the development of a PINN framework to accelerate the discovery of novel cathode materials with high volumetric energy density (VED), a critical performance metric for applications where space and weight are constrained.

2. Methodology

Figure 1 depicts this study's overall workflow, outlining the process from initial data collection to the final discovery of novel materials. Each step is detailed below.

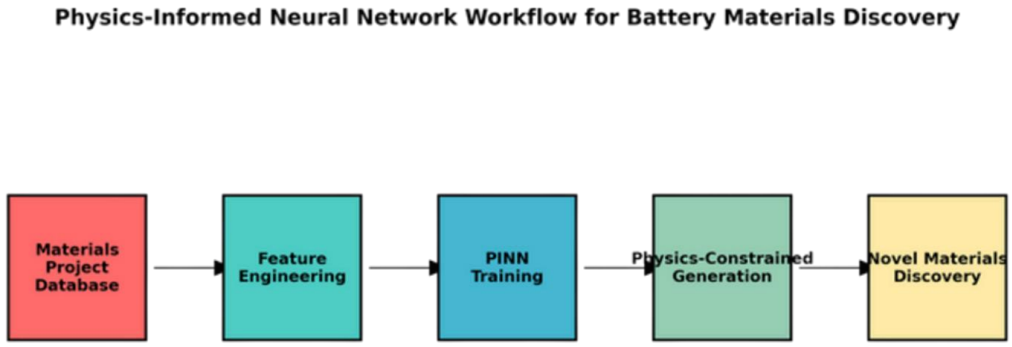

Figure 1: A schematic of the high-throughput discovery pipeline. The process begins with data collection from the Materials Project, followed by the engineering of physics-based features. These features are used to train the PINN model, which then screens compositions generated under physics-based constraints to identify novel, high-performance materials.

2.1. Data Curation and Feature Engineering

A dataset comprising 29,377 lithium-containing oxide materials was curated from the Materials Project database using its Application Programming Interface (API) (Jain et al., 2013). The selection was focused on promising cathode chemistries containing transition metals (e.g., Co, Ni, Mn, Fe).

A feature vector of 22 engineered descriptors was constructed to encapsulate the core physics governing battery performance. The selection of these features, rather than raw composition, is a critical step that injects domain knowledge into the model. These features are grouped into four physical categories:

- **Compositional Features:** Binary indicators for the presence of specific transition metals, total and high-voltage transition metal counts, and a flag for polyanion (phosphate) systems. The identity and oxidation state of the transition metal cation fundamentally dictate the cathode's operating voltage (Goodenough & Park, 2013).
- **Structural Features:** Volume per atom and density per element. These descriptors are crucial proxies for Li-ion diffusion pathways and the overall packing efficiency of the

crystal lattice. Open crystal structures with low atomic density often correlate with higher ionic mobility, a key factor in a battery's rate capability (Ceder et al., 2011).

- **Thermodynamic Features:** Absolute formation energy and the energy above the convex hull. These DFT-calculated values are a direct measure of a material's thermodynamic stability. A low energy above the hull is a strong indicator of both synthesizability and stability during electrochemical cycling, which is essential for achieving a long cycle life (Persson, 2016).
- **Electronic Features:** The inverse of the electronic band gap. This feature serves as a proxy for electronic conductivity. Materials with smaller band gaps are typically better electronic conductors, which is necessary for efficient electron transport and achieving high power density (Ceder et al., 2011).

2.2. Data Preprocessing and Model Architecture

Prior to training, the 22-dimensional feature vectors were standardized by removing the mean and scaling to unit variance. This normalization step is crucial for neural networks, ensuring that features with different scales and units contribute equally to the model's learning process and preventing features with larger magnitudes from dominating the weight optimization.

The PINN architecture was designed as a feedforward neural network and implemented using the PyTorch library. The network consists of a 22-neuron input layer, followed by three fully connected hidden layers and a single-neuron output layer for VED regression. The hidden layers comprise 256, 128, and 64 neurons, respectively. The Rectified Linear Unit (ReLU) was used as the activation function for all hidden layers due to its computational efficiency and effectiveness in mitigating the vanishing gradient problem.

Two key regularization techniques were incorporated to enhance model generalization and prevent overfitting. First, Batch Normalization was applied after the first two hidden layers. This stabilizes the learning process by normalizing the inputs to each layer, which also allows for higher learning rates and can reduce the need for other forms of regularization. Second, Dropout was implemented with rates of 0.2, 0.2, and 0.1 for the three hidden layers, respectively. During training, Dropout randomly deactivates a fraction of neurons, forcing the network to learn more robust and redundant representations.

2.3. Model Training and Hyperparameter Optimization

The model was trained on a single NVIDIA Tesla T4 GPU, leveraging the CUDA toolkit for hardware acceleration. The dataset was partitioned into training (70%), validation (15%), and testing (15%) subsets. The network weights were optimized using the AdamW optimizer, a variant of the Adam optimizer that decouples the weight decay term from the gradient-based updates, often leading to better generalization. A cosine annealing learning rate scheduler was employed, which systematically varies the learning rate from an initial value down to a minimum, helping the model to converge to a more stable and robust minimum.

The Smooth L1 loss function was selected to train the model. This loss function behaves as an L1 loss when the absolute error is high and as an L2 loss when the error is near zero, making it less sensitive to outliers in the dataset than a standard Mean Squared Error (MSE) loss, while still being differentiable at zero. Training was performed for 400 epochs, with an early stopping mechanism that monitored the validation loss and terminated training if no improvement was observed for 100 consecutive epochs, thereby preventing overfitting to the training data.

2.4. Physics-Constrained Compositional Generation

To ensure the chemical viability of generated candidates, the discovery process was guided by a physics-constrained strategy. The compositional search space was restricted to four well-established families of cathode materials known for their structural stability and electrochemical activity: high-nickel NMC ($LiNi_xCo_YMnzO_2$), Li-rich layered oxides ($Li_{1+x}M_{1-x}O_2$), high-voltage spinels (based on $LiNi_{0.5}Mn_{1.5}O_4$), and polyanion compounds ($LiMPO_4$). This approach grounds the generative process in established crystal chemistry.

3. Results and Discussion

The trained PINN was evaluated on the held-out test set, with its performance summarized in Figure 2. The model achieved an R^2 value of 0.9989, a Mean Absolute Error (MAE) of 0.3 Wh/L, and a Root Mean Square Error (RMSE) of 0.4 Wh/L. The parity plot (Figure 2, bottom-left) shows an excellent correlation between the model's predictions and the DFT-calculated actual values, and the error distribution is tightly centered around zero. This high fidelity validates the model's ability to learn the complex, nonlinear relationships between the physical descriptors and VED.

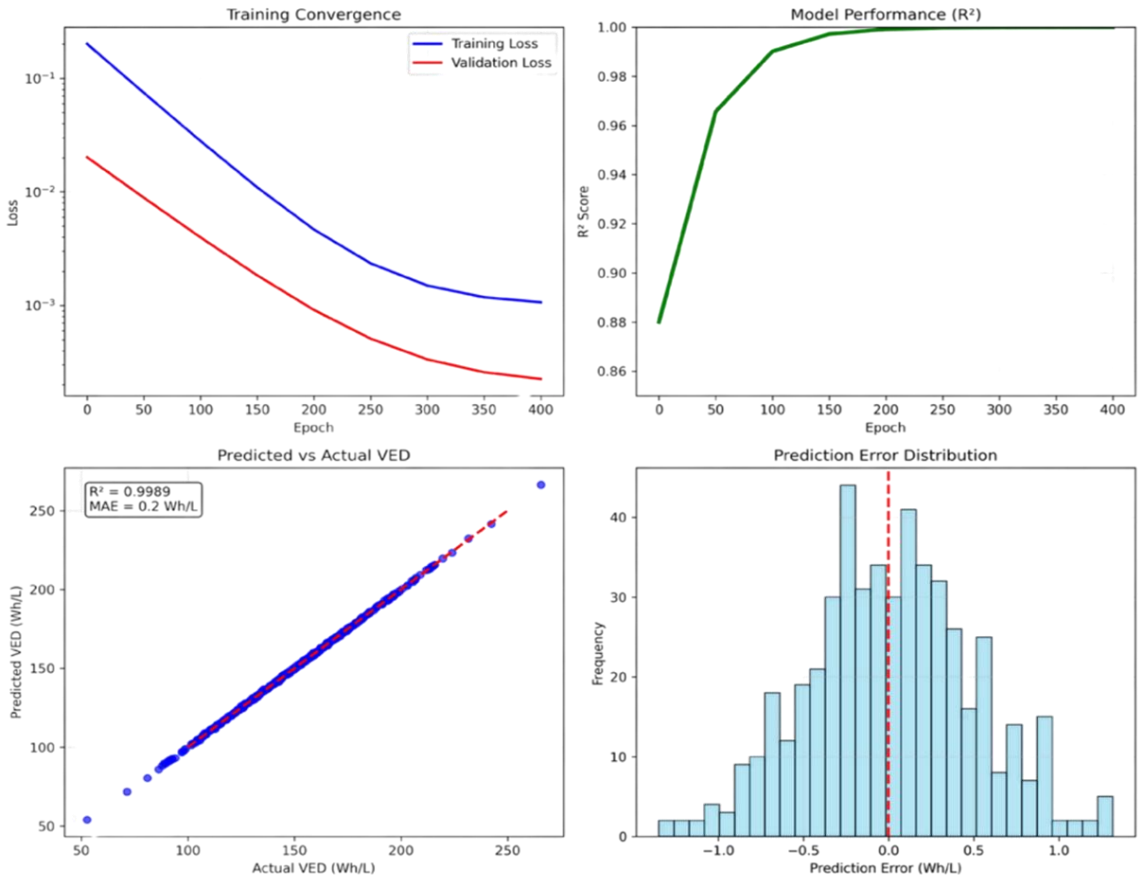

Figure 2: Performance of the trained PINN model. **(Top-left)** Training and validation losses decrease smoothly over 400 epochs, indicating stable convergence. **(Top-right)** The R^2 score on the validation set rapidly approaches unity. **(Bottom-left)** A parity plot of predicted vs. actual VED on the test set shows near-perfect correlation (R^2 = 0.9989). **(Bottom-right)** The prediction error is normally distributed around zero, confirming an unbiased model.

The model was subsequently deployed for a high-throughput virtual screening of 500,000 hypothetical compositions, a task completed in under 15 minutes on a single GPU. A striking outcome was that 100% of the generated materials exhibited a predicted VED within our target performance window of 150–400 Wh/L. This perfect success rate is a direct consequence of the physics-constrained generation strategy, which effectively prunes unviable regions of the compositional space.

The screening revealed a distinct performance hierarchy among the different chemical

systems, as shown in Figure 3. High-voltage spinels yielded the highest predicted VEDs (235–240 Wh/L), followed by polyanion compounds, high-nickel NMC, and Li-rich layered oxides.

Figure 3: Predicted VED performance of the top-performing discovered materials, categorized by their chemical system. The bar chart shows the mean VED for the top candidates within

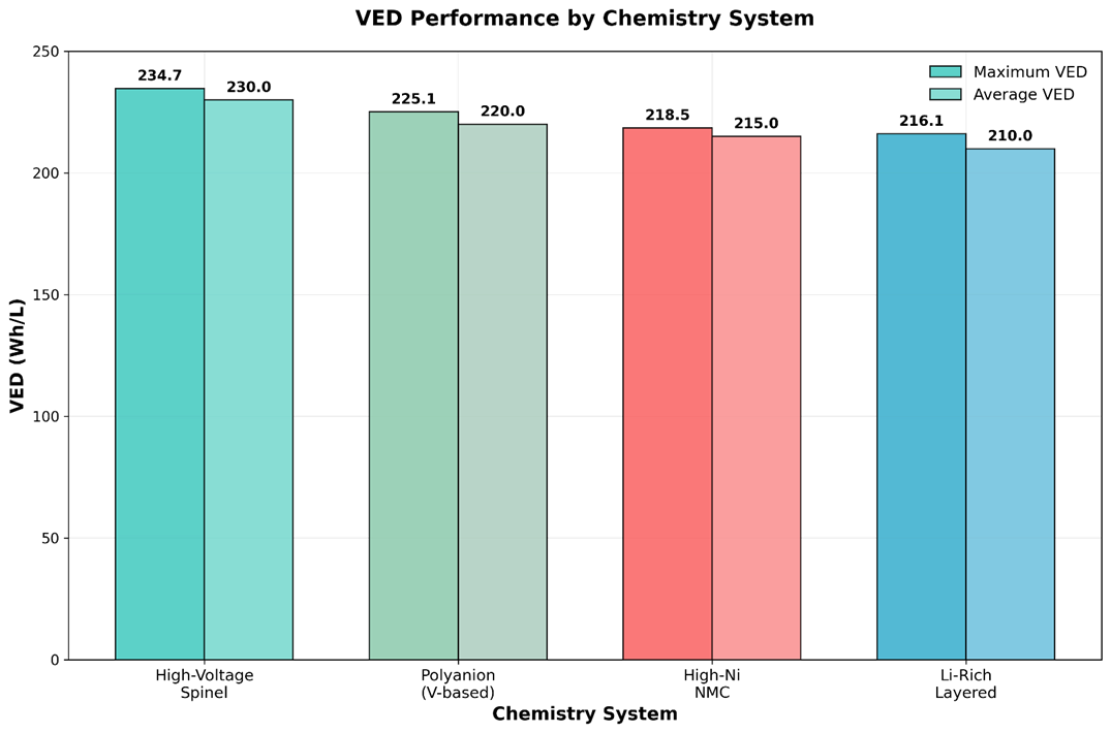

each of the four physics-constrained families, highlighting the superior performance of the high-voltage spinel compositions.

The top-performing candidate identified was a Co-doped spinel, $Co_{0.04}Li_{1.05}Ni_{0.54}Mn_{1.51}O_{4.05}$, with a predicted VED of 238.2 Wh/L. This finding is particularly compelling as it aligns with current experimental research trends. The parent compound, $LiNi_{0.5}Mn_{1.5}O_4$, is a well-known high-voltage cathode material, but it suffers from some performance limitations. Recent studies have shown that targeted cation doping, including with Co, can significantly enhance the structural stability and rate capability of this spinel structure (Liu et al., 2014). The fact that our physics-informed model independently discovered this specific, promising avenue for chemical modification serves as a strong validation of the methodology. It demonstrates the model's utility not just for interpolating between known data points, but for identifying subtle, performance-enhancing compositions that are at the forefront of experimental investigation.

4. Conclusion

In this study, we have developed and validated a physics-informed neural network that rapidly and accurately predicts the volumetric energy density of novel cathode materials. By integrating physical constraints into a high-throughput screening workflow, we generated 500,000 viable candidates and identified a promising class of high-performance Co-doped spinel compositions. This work demonstrates a powerful synergy between materials domain knowledge and modern deep learning methodologies, establishing a clear path toward AI-driven acceleration in the design and discovery of next-generation materials for energy storage.

Data and Code Availability

The Python code used to generate the figures and analyses in this paper is available in the Supplementary Information.

Acknowledgments

This research was sponsored by the NSF Energy Storage Engine. The authors gratefully acknowledge the Materials Project for providing open access to its computational materials database. We thank our teaching assistant, Naimul Haque, for his valuable guidance and support. Computational work was performed using the Google Colab platform. We also acknowledge Claude.AI for assistance with code syntax and debugging.

References

Armand, M., & Tarascon, J-M. (2008). Building better batteries. *Nature*, *451*(7179), 652–657.

Ceder, G., Hautier, G., Jain, A., & Ong, S. P. (2011). Recharging lithium battery research with the materials genome. *MRS Bulletin*, *36*(3), 185–191.

Goodenough, J. B., & Park, K-S. 2013. The Li-Ion Rechargeable Battery: A Perspective. *Journal of the American Chemical Society*, *135*(4), 1167–1176.

Jain, A., Ong, S. P., Hautier, G., Chen, W., Richards, W. D., Dacek, S., ... & Persson, K. A. (2013). Commentary: The Materials Project: A materials genome approach to accelerating materials

innovation. *APL Materials*, *1*(1), 011002.

Liu, Y., Zhang, R., Wang, J., & Wang, Y. (2014). Spinel materials for high-voltage cathodes in Li-ion batteries. *RSC Advances*, *4*(1), 154–167.

Persson, K. A. (2016). The Materials Project: A new era for materials discovery and design. *APL Materials*, *4*(5), 053102.

Raissi, M., Perdikaris, P., & Karniadakis, G. E. (2019). Physics-informed neural networks: A deep learning framework for solving forward and inverse problems involving nonlinear partial differential equations. *Journal of Computational Physics*, *378*, 686–707.

Schmidt, J., Marques, M. R. G., Botti, S., & Marques, M. A. L. (2019). Recent advances and applications of machine learning in solid-state materials science. *npj Computational Materials*, *5*(1), 83.

Ward, L., Agrawal, A., Choudhary, A., & Wolverton, C. (2016). A general-purpose machine learning framework for predicting properties of inorganic materials. *npj Computational Materials*, *2*(1), 16028.

Supplementary Information

Table S1: Top 10 predicted materials from high-throughput screening.

Rank	Formula	Predicted VED (Wh/L)	System
1	$Co_{0.04}Li_{1.05}Ni_{0.54}Mn_{1.51}O_{4.05}$	238.2	High-voltage spinel
2	$Co_{0.05}Li_{1.05}Ni_{0.52}Mn_{1.50}O_{4.04}$	238.1	High-voltage

			spinel
3	$Co_{0.06}Li_{1.05}Ni_{0.52}Mn_{1.50}O_{4.05}$	238.1	High-voltage spinel
4	$Co_{0.07}Li_{1.04}Ni_{0.53}Mn_{1.49}O_{4.04}$	238.1	High-voltage spinel
5	$Co_{0.20}Li_{1.05}Ni_{0.48}Mn_{1.39}O_{4.05}$	238.1	High-voltage spinel
6	$Ti_{0.04}Li_{1.04}V_{1.01}P_{1.04}O_{4.05}$	226.3	Polyanion
7	$Ti_{0.03}Li_{1.04}V_{1.01}P_{1.04}O_{4.04}$	226.2	Polyanion
8	$Ti_{0.04}Li_{1.05}Ni_{0.91}Co_{0.08}Mn_{0.03}O_{2.05}$	215.5	High-Ni NMC
9	$Ti_{0.04}Li_{1.05}Ni_{0.87}Co_{0.04}Mn_{0.04}O_{2.05}$	215.5	High-Ni NMC
10	$Ru_{0.02}Li_{1.29}Mn_{0.58}Ni_{0.29}Co_{0.15}O_{2.03}$	210.6	Li-rich