Development of a Solid-State Continuous BP Monitor via Active Material Actuation and Pulse Wave Analysis

Abstract

This paper presents a solid-state, continuous non-invasive blood pressure (CNIBP) monitor. The system replaces traditional pneumatic cuffs with an active-material elastic sleeve and embedded piezo-electric sensors. Utilizing an LMP7721 charge amplifier and deterministic AVR Assembly logic, the device tracks pulse wave amplitude in real-time. A closed-loop control system manages actuation hysteresis and sensor drift via a dual-threshold deadband, while a hardware watchdog timer ensures patient safety during potential firmware exceptions.

I. System Architecture & Theory of Operation

A. Analog Front-End (AFE) and Frequency Response

Piezo-electric transducers generate high-impedance charge signals proportional to arterial displacement. To prevent signal loading, an LMP7721 precision amplifier is configured as a charge-to-voltage converter. The feedback network of R_t=300 MΩ and C_t=10nF provides hardware AC-coupling, effectively eliminating DC offset and sensor hysteresis.

Simulation Observations: As demonstrated in the AC Analysis Bode plot, this feedback network acts as a highly tuned bandpass filter. It exhibits a sharp cutoff for frequencies below 0.1 Hz, ensuring that static baseline pressure from the elastic band is entirely rejected, while cleanly passing the 1–2 Hz frequencies characteristic of a human heartbeat. The corresponding Transient Analysis confirms this behavior, showing a stable, artifact-free pulsatile AC component. The resulting waveform is biased at 2.5V and interfaced to the microcontroller ADC0 port.

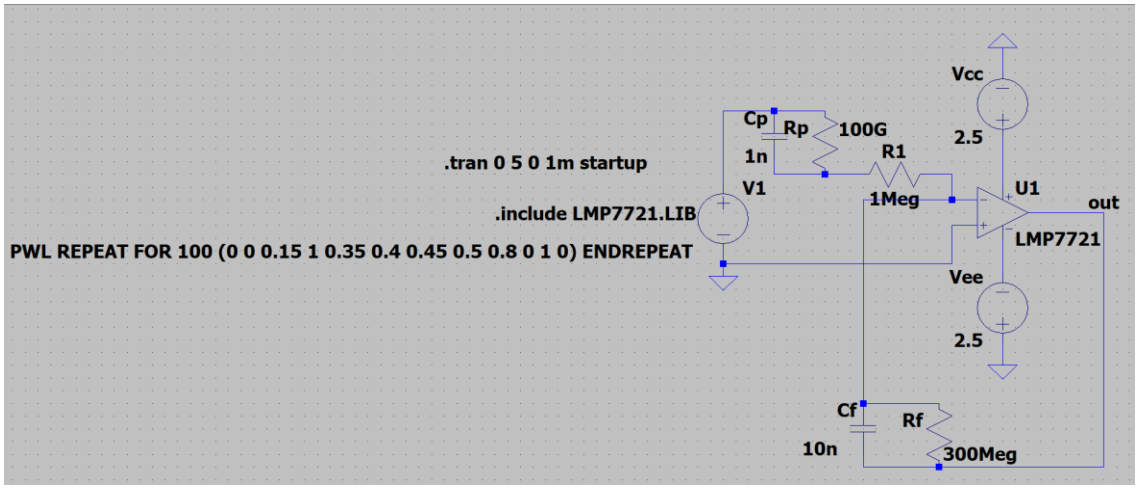

Sensor Circuit

DC Analysis

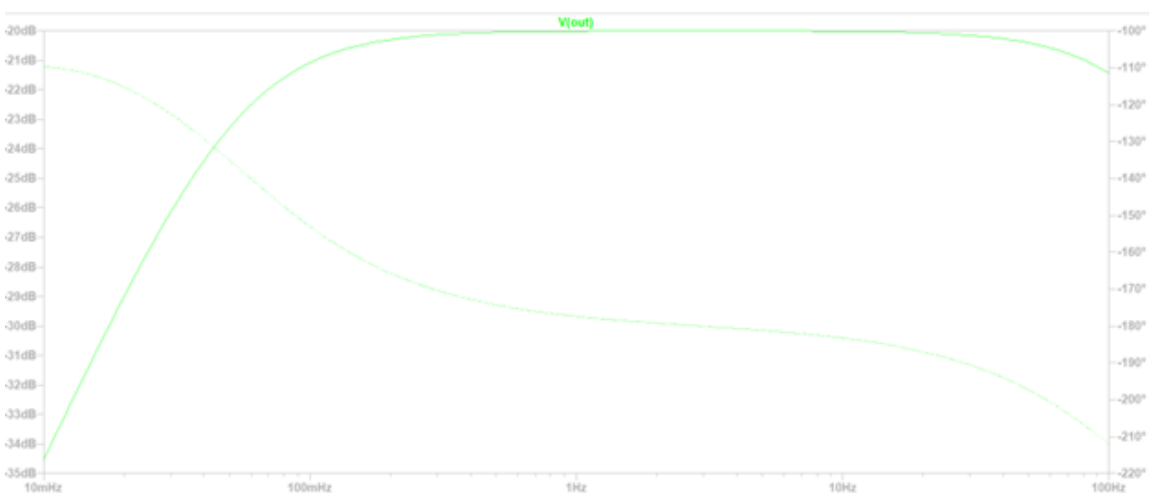

AC Analysis Bode Plot

B. Digital Signal Processing (DSP) Methodology

The system executes a deterministic 100 Hz sampling routine via Timer1 Interrupts. Raw data is processed through a shift-based Exponential Moving Average (EMA) filter: $V_{filt} = (Sample + 7 * Old) / 8$. This digital smoothing reduces mechanical artifacts from the elastic sleeve. Following filtration, the firmware tracks local maxima and minima using a leaky integrator logic to calculate the real-time pulse amplitude (Range).

II. Mechanical CAD Integration and Interfacing

To eliminate the need for pneumatic inflation, the device relies on a multi-layer mechanical architecture. The inner thermoplastic polyurethane (TPU) sleeve features a staggered array of recessed pockets. This ensures the PVDF piezo-electric sensors maintain a flush, zero-gap mechanical coupling with the skin over the brachial artery.

The actuation layer utilizes Shape Memory Alloy (SMA) wires routed along a rigid polymer spine. This spine anchors the compressive forces, converting the linear contraction of the active materials into uniform circumferential pressure. The integrated Control Pod houses the PCB on internal standoffs, shielding the sensitive CMOS amplifier from electromagnetic interference while providing physical ports for data extraction and power.

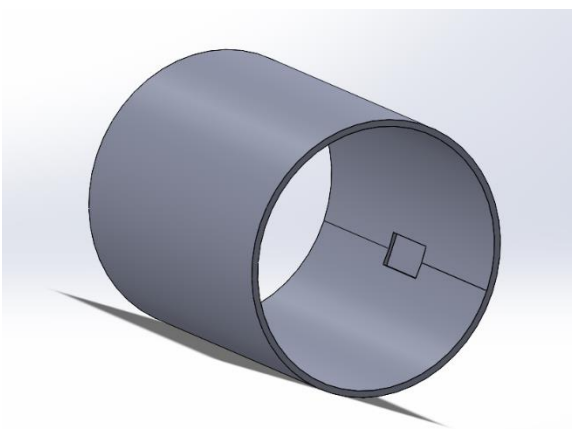

Inner Sleeve

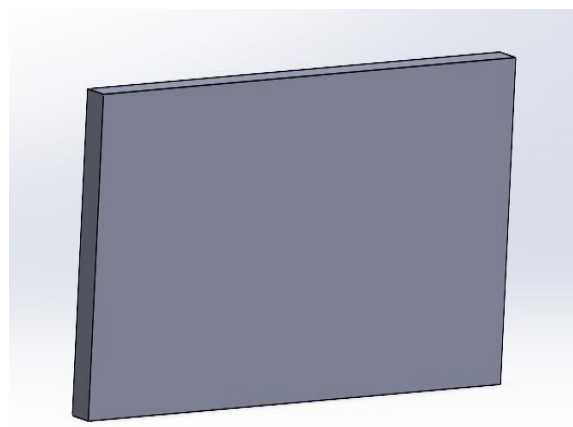

Piezo Sensor

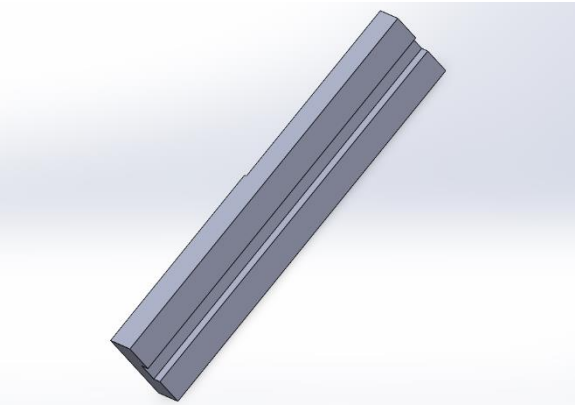

Rigid Spine

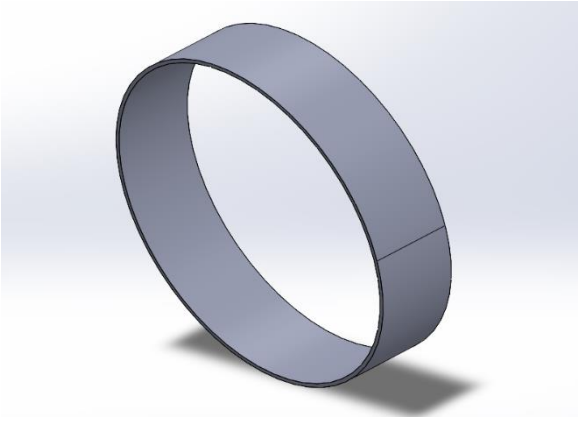

Active Band

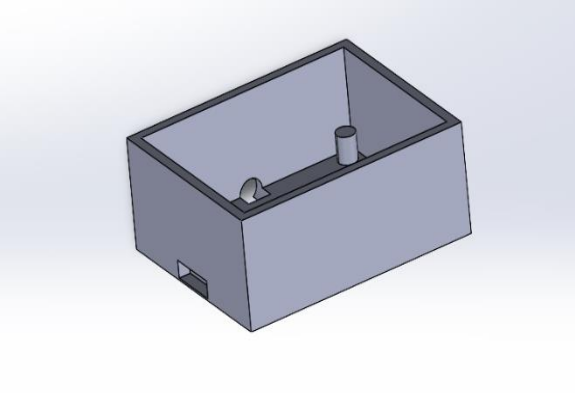

Control-Pod Base

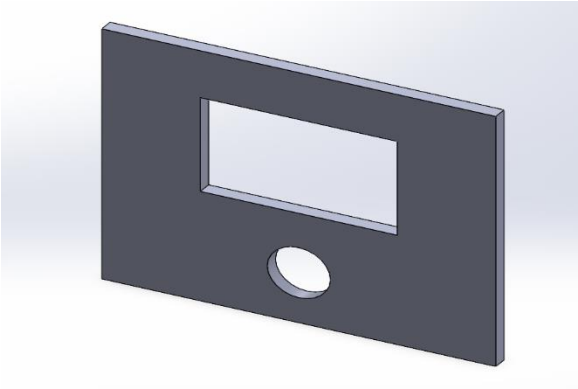

Control-Pod Lid

III. Control Logic and Actuation

A. Hysteresis and Deadband Management

Active materials, such as Nitinol or Dielectric Elastomers, exhibit non-linear mechanical hysteresis. To prevent limit-cycling and "hunting," the control logic implements a software deadband. The system utilizes a dual-threshold window (0x35 to 0x45), and actuation only occurs when the pulse range drifts outside this window. This approach compensates for actuator "memory" by prioritizing biological output over open-loop modeling.

B. Fast PWM Actuation

Actuation is managed by a 100 Hz Fast PWM signal (Timer1, Mode 14) on pin PB1. When the pulse range falls below the lower threshold, the PWM duty cycle increases to contract

the active material. When the range exceeds the upper threshold, the duty cycle decreases to relax the band.

IV. Safety Mechanisms and Validation

A. Hardware Fail-Safes

Given the compressive nature of the active material, a hardware Watchdog Timer (WDT) is integrated into the core logic. The WDT is configured with a 500ms timeout, meaning the firmware must issue a "Watchdog Reset" command during every valid MainLoop and ISR cycle. In the event of a software hang or sensor failure, the WDT triggers a global hardware reset, immediately clearing the PWM output to 0% and relaxing the cuff to ensure patient safety.

B. Implementation

The physical build-up requires a logic-level N-channel MOSFET to bridge the 5V microcontroller logic with the power requirements of the active materials. To maintain signal integrity, the AFE PCB utilizes guard rings and shielded cabling. The system is calibrated by mapping the steady-state PWM duty cycle against a clinical gold-standard sphygmomanometer, establishing a linear regression model to translate digital PWM values into mmHg readings.

V. Conclusion

The proposed monitor effectively bridges analog sensor physics with real-time digital control. By utilizing ultra-low bias current amplification, deterministic assembly logic, and hardware-level safety protocols, the device provides a robust framework for continuous, cuffless hemodynamic monitoring.