Datasheet:

Test Board

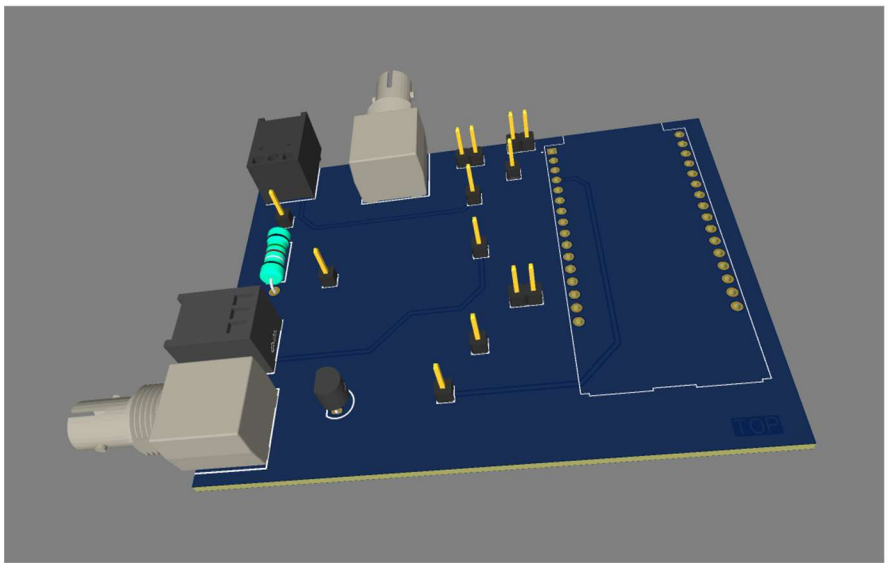

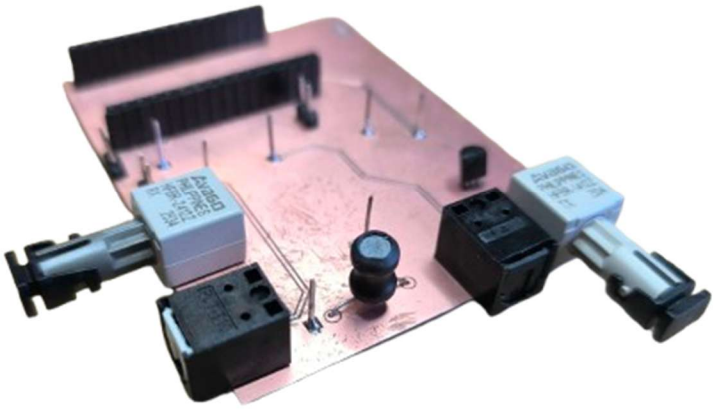

Table of contents

1. Table of illustrations 2
2. Introduction 3
3. State of the art 3
   - 3.1. SFP (Small Form-Factor Pluggable) 3
   - 3.2. TosLink 4
   - 3.3. Transceivers 4
4. Test board 5
   - 4.1. Components chosen 5
   - 4.2. Schematics 6
   - 4.3. Routing 10
5. Programming 12
6. Tests made 12
   - 6.1. TosLink 12
   - 6.2. HFBR 14
7. Annexe A: Software used 16

1. Table of illustrations

Table 1: Specifications of the typical SFP; Source: Axel LEROY 3
Table 2: Specifications of the typical TosLink; Source: Axel LEROY 4
Table 3: Specifications of the classical transceivers; Source: Axel LEROY 4
Table 4: Specifications of the selected TosLink; Source: Axel LEROY 5
Table 5: Specifications of the selected classical transceivers; Source: Axel LEROY 5

Figure 1: Schematics of the connexions of the ESP32, Source: Axel LEROY 6
Figure 2: Schematics of the connexions of the HFBR-2412Z, Source: Axel LEROY 7
Figure 3: Schematics of the connexions of the HFBR-1412Z, Source: Axel LEROY 8
Figure 4: Schematics of the connexions of the TosLink emitter and receiver, Source: Axel LEROY 8
Figure 5: Routing of the top part of the board, Source: Axel LEROY 10
Figure 6: Routing of the bottom part of the board, Source: Axel LEROY 11
Figure 7: Test 1 of the TosLink, Source: Axel LEROY 12
Figure 8: Test 2 of the TosLink, Source: Axel LEROY 13
Figure 9: Test 3 of the TosLink at 4 Mb/s, Source: Axel LEROY 13
Figure 10: Test 3 of the TosLink at 16 Mb/s, Source: Axel LEROY 13
Figure 11: Test 1 of the HFBR, Source: Axel LEROY 14
Figure 12: Test 3 of the HFBR at 200 kb/s, Source: Axel LEROY 14
Figure 13: Test 3 of the HFBR at 800 kb/s, Source: Axel LEROY 15
Figure 14: Test 3 of the HFBR at 5 Mb/s, Source: Axel LEROY 15

2. Introduction

The NenuFAR project uses several antennas that need to be monitored and controlled locally (sending data over a short distance) and remotely (sending data over a mid/long distance). The current technology used for communication is going to be upgraded, which is why there is a need for a study.

The project surrounding this datasheet consists in testing several optical communication technologies to find the ones that can be used by the observatory in the NenuFAR project. To do so, a test board must be designed. This datasheet describes the test board that was realised during a project between the observatory of Nançay and Polytech Orléans.

Before explaining the test board, a state of the art was made to choose which technologies to test and to showcase what exists.

3. State of the art

3.1. SFP (Small Form-Factor Pluggable)

A SFP is a pluggable optical transceiver that can reach high distances and high speeds. Its price is often expensive, but the performances are generally better than with other transceivers. More details can be found in the table below (table 1).

	Typically
Transmission rate	**100 Mb/s to 100 Gb/s**
Optic fiber	**MMF or SMF (LC connectors)**
Duplex/Simplex	**Simplex or Duplex**
Distance	**Up to 80 km**
Operating temperature	**-40°C to 85°C**
Price	**15€ to ~40000€**

Table 1: Specifications of the typical SFP; Source: Axel LEROY

However, a SFP isn't easy to implement because it reaches a high bit rate that needs a PHY (physical layer of ethernet). A simple microcontroller can't send and receive data at ethernet speed, which explains the need for a PHY. However, a PHY isn't easy to implement either: there is a lot of parameters to consider. It is conceivable to study a use at lower speeds and without a PHY but it would need to be studied to make sure not to damage the SFP.

3.2. TosLink

TosLink is a technology mostly used in sound transmission using optical communication. It is made to reach low speeds over low distances. This technology tends to be cheaper than others. More details can be found in the table below (table 2).

	Typically
Transmission rate	**~6 Mb/s**
Optic fiber	**POF (1mm)**
Duplex/Simplex	**Simplex**
Distance	**~10 m**
Operating temperature	**-40°C to 85°C**
Price	**3-5€**

Table 2: Specifications of the typical TosLink; Source: Axel LEROY

3.3. Transceivers

Another approach is classical transceivers (emitter and receiver) using an LED and a photodiode. There is a lot of diversity in terms of distance covered, transmission rate, and optic fibre which makes it easy to find a product adapted to any application. More details can be found in the table below (table 3).

	Typically
Transmission rate	**5 Mb/s to 100 Mb/s**
Optic fiber	**SMF, MMF or PCS**
Duplex/Simplex	**Simplex**
Distance	**From 50 m to 2 km**
Operating temperature	**-40°C to 85°C**
Price	**~20€**

Table 3: Specifications of the classical transceivers; Source: Axel LEROY

4. Test board

The measuring board is made to test the limits of the transceivers in term of bit rate, distance and BER. First, the components will be presented, then the schematics and finally the routing.

4.1. Components chosen

The technologies chosen to be tested were the TosLink and the classical transceivers.

The chosen components for the TosLink were the PLT133/T10W for the emitter and the PLR237/T10BK for the receiver. Both work with a power voltage of 3V3 which makes them usable with most microcontrollers. In theory, they are also able to work with a 5V power voltage. The encoding protocol is NRZ (Non-Return to Zero) encoding, which means that a bit will be represented by a high state (VCC) or a low state (0V). These emitter and receiver have a higher bit rate than the typical TosLink (~x3): they can go up to 16 Mb/s. More details in the table below (table 4).

	Components selected
Transmission rate	**16 Mb/s**
Optic fiber	**POF (1mm)**
Duplex/Simplex	**Simplex**
Distance	**25 m**
Operating temperature	**-20°C to 70°C**
Price	**~3 €**

Table 4: Specifications of the selected TosLink; Source: Axel LEROY

For the classical transceivers, the selected components were the HFBR-1412Z for the emitter and the HFBR-2412Z for the receiver. Both work with a power voltage of 5V which makes them usable with some microcontrollers, but they need amplification to work with every microcontroller. Just like the TosLink, they use NRZ encoding. More details in the table below (table 5).

	Components selected
Transmission rate	**5 Mb/s**
Optic fiber	**MMF (ST connector)**
Duplex/Simplex	**Simplex**
Distance	**1.5 km**
Operating temperature	**-40°C to 85°C**
Price	**23 €**

Table 5: Specifications of the selected classical transceivers; Source: Axel LEROY

The highest bit rate is of 16 Mb/s (TosLink), which means that the microcontroller selected needs to go up to that speed. The board was made with the microcontroller ESP32-C6-DEVKITC-1-N8 in mind, but it can be replaced by any other microcontroller with a correct extension board.

4.2. Schematics

The following figures show the schematics of the test board. Figure1 shows the connexions of the ESP32. Figure 2 and figure 3 respectively show the receiving and the emitting part using HFBR. Figure 4 shows the receiving and the emitting parts using TosLink. The abbreviation MP is for Measuring Pin, pins that can be used to retrieve the data/voltage of each important track.

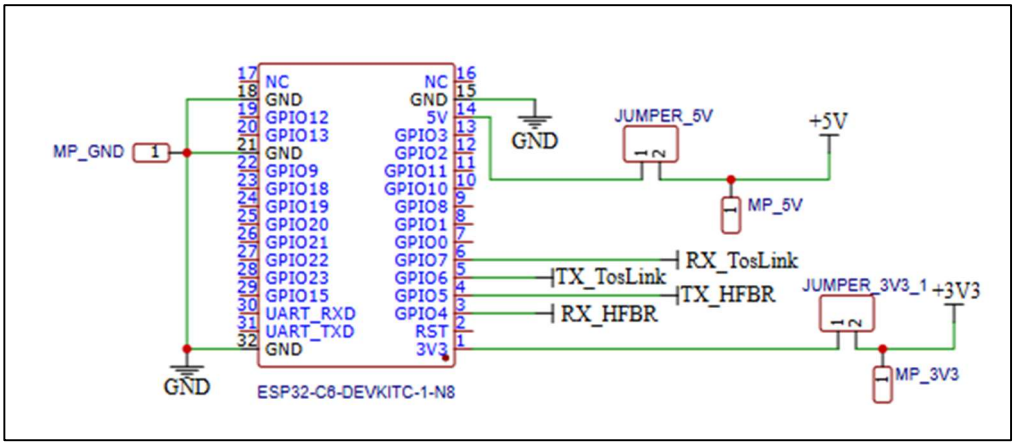

Figure 1: Schematics of the connexions of the ESP32, Source: Axel LEROY

Are connected to the ESP32:

- Power:
  - 5V (has a jumper for power management)
  - 3V3 (has a jumper for power management)
  - GND
- Data:
  - RX HFBR (HFBR-2412Z)
  - TX HFBR (HFBR-1412Z)
  - RX TosLink (PLR237/T10BK)
  - TX TosLink (PLT133/T10W)

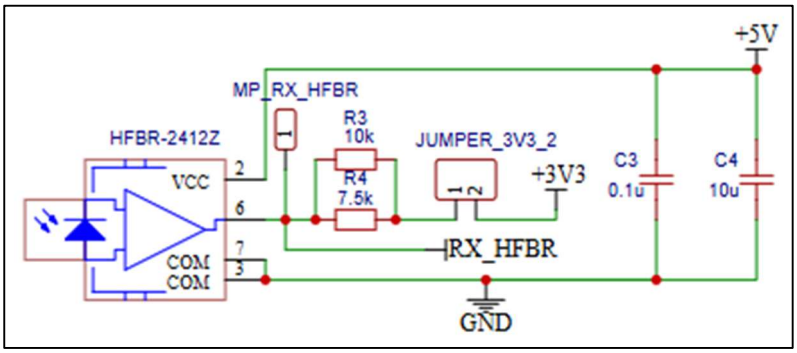

Figure 2: Schematics of the connexions of the HFBR-2412Z, Source: Axel LEROY

Are connected to the HFBR-2412Z:

- Power:
  - 5V
  - 3V3, is used for the ESP32 to read the output on a 3V3 scale instead of a 5V scale (has a jumper for power management)
  - GND
- Data:
  - Output RX HFBR connected to the ESP32
- Components:
  - C3, C4: decoupling capacitors
  - R3, R4: make an equivalent resistor of about 4k to retrieve the data on a scale from 0 to 3V3 instead of 0 to 5V

Due to this electrical circuit, the low and high state (0 or 1) received by the ESP32 pin are inverted: when the emitter sends a 0, the ESP32 will receive a 1 and vice versa. This won't be an issue; it only needs to be taken into account in the software by inverting the bits received by the HFBR.

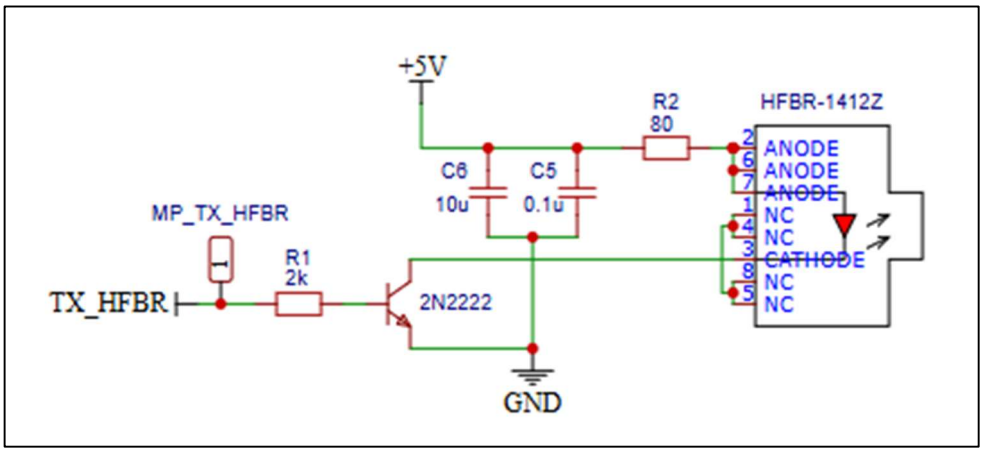

Figure 3: Schematics of the connexions of the HFBR-1412Z, Source: Axel LEROY

Are connected to the HFBR-1412Z:

- Power:
  - 5V
  - GND (through the use of the transistor)
- Data:
  - Input TX HFBR connected to the ESP32 (through the use of the transistor)
- Components:
  - C5, C6: decoupling capacitors
  - Transistor, R1, R2: used to amplify the data sent by the microcontroller and make it go from a scale of 0 to 3V3 to a scale of 0 to 5V

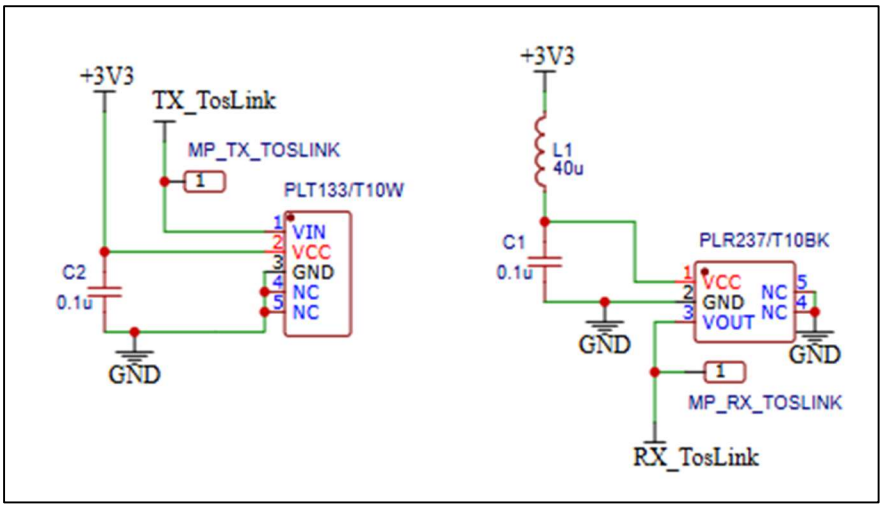

Figure 4: Schematics of the connexions of the TosLink emitter and receiver, Source: Axel LEROY

Are connected to the PLT133/T10W:

- Power:
  - 3V3
  - GND
- Data:
  - Input TX TosLink connected to the ESP32
  -
- Components:
  - C1: decoupling capacitor

Are connected to the PLR237/T10BW:

- Power:
  - 3V3
  - GND
- Data:
  - Output RX TosLink connected to the ESP32
- Components:
  - C1: decoupling capacitor
  - L1: used to avoid noise from the power track

All the schematics can be found on the GitHub repository (https://github.com/GPSE-Axel/Projet-NenuFAR/tree/main/Carte) in the file "**Schéma carte.pdf**". The schematics were made using EasyEDA and the project file can be found on GitHub under the name "**SCH_Carte-de-test_2026-04-01.json**".

4.3. Routing

The following figures show the test board's routing. Figure 5 shows the top (components side), and figure 6 shows the bottom (copper side). On both sides are described what each hole/component is. The abbreviation MP is for Measuring Pin, pins that can be used to retrieve the data/voltage of each important track.

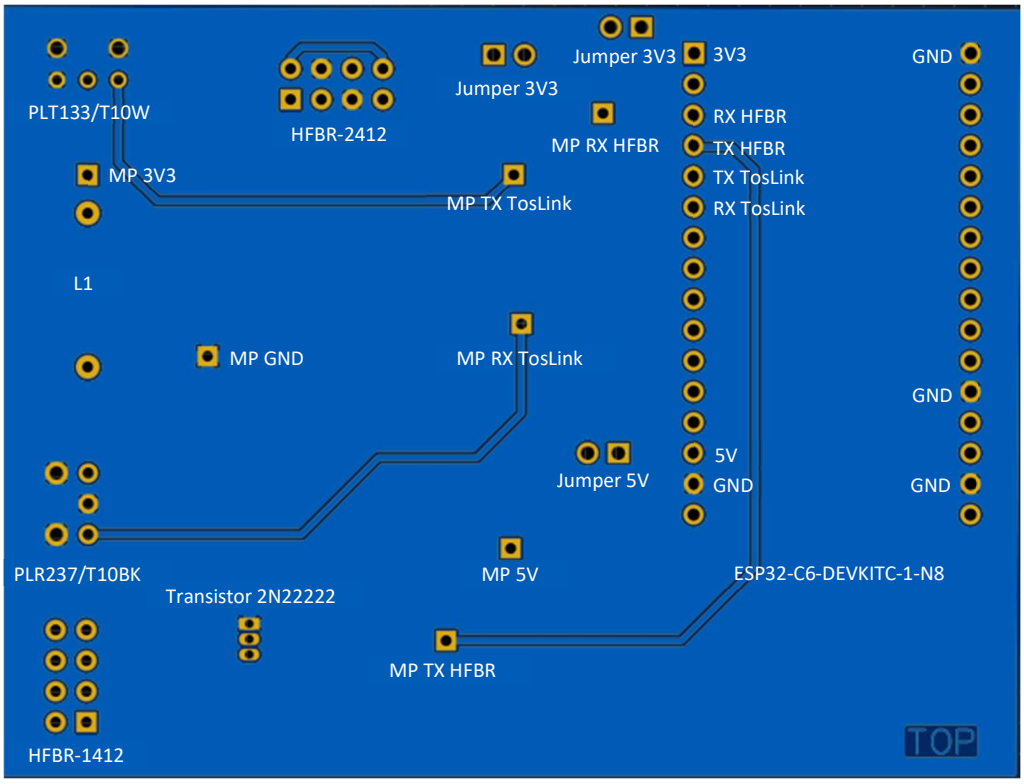

Figure 5: Routing of the top part of the board, Source: Axel LEROY

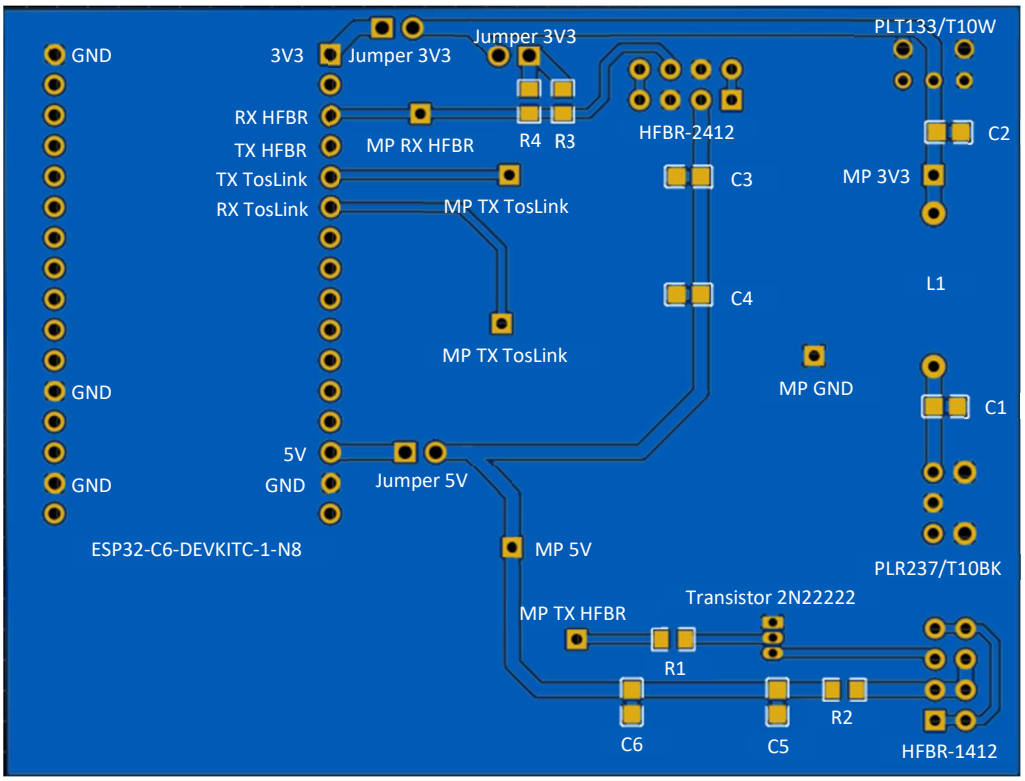

Figure 6: Routing of the bottom part of the board, Source: Axel LEROY

The dimensions of the board are 85.5 mm by 63.9 mm. The tracks used for power are 1 mm wide and every other track is 0.5 mm wide. The bottom and top planes are ground planes.

The schematics of the test board's routing can be found on the GitHub repository (https://github.com/GPSE-Axel/Projet-NenuFAR/tree/main/Carte) in the files "**PCB_TOP.pdf**" and "**PCB_BOTTOM.pdf**". The Gerber files can also be found on the GitHub repository in the zip file "**Gerber_Files.zip**". The routing was made using EasyEDA and the project file can be found on GitHub under the name "**SCH_Routage_2026-04-01.json**".

5. Programming

All the details concerning the programming of the ESP32 are included directly in comments in the source code. The source code can be found on the GitHub repository (https://github.com/GPSE-Axel/Projet-NenuFAR/tree/main/Programmation). The "**Test_2**" code was used for the test 2 (cf. 6. Tests made) and the "**Test_3**" code was supposed to be used for the test 3 (cf. 6. Tests made). To use these codes, import the "**Test_2**" or "**Test_3**" on Visual Studio Code and build them using the ESP-IDF extension.

6. Tests made

Both technologies (TosLink and HFBR), were tested the same way:

- Test 1, a test of emission (visual): making sure that the emitter lights up when the corresponding TX pin gives a 1 and making sure it turns of when the pin gives a 0.
- Test 2, a test of reception (using a program and confirming with a voltmeter): making sure the corresponding RX pin receives the right voltage according to the emitter's state.
- Test 3, tests at several bit rates (using a program or a generator with an oscilloscope): sending a known signal and checking that the signal received is the same.

The last test is made over an adapted distance (5 m for TosLink and around 190 m for HFBR).

6.1. TosLink

Test 1: Passed, the emitter lights up when the data pin receives 3V3 (see figure 7).

Test 2: Passed, the receiver gives a 1 when it receives a 0 and gives a 0 when it receives a 1 (see figure 8).

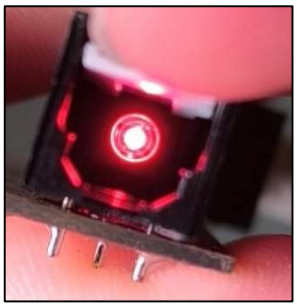

Figure 7: Test 1 of the TosLink, Source: Axel LEROY

Test 3: Partly passed, using a low frequency generator and an oscilloscope (see figure 9 and 10). At 4 Mb/s, the signal received is clean and similar to the one sent, but at 16 Mb/s, the signal received is polluted and might not be read correctly by a microcontroller.

```
Sending 0 :
Sending 0 on HFBR TX: 0
Received by HFBR RX: 1

Sending 0 on TosLink TX: 0
Received by TosLink RX: 0

Sending 1 :
Sending 1 on HFBR TX: 1
Received by HFBR RX: 0

Sending 1 on TosLink TX: 1
Received by TosLink RX: 1
```

Figure 8: Test 2 of the TosLink, Source: Axel LEROY

Figure 9: Test 3 of the TosLink at 4 Mb/s, Source: Axel LEROY

Figure 10: Test 3 of the TosLink at 16 Mb/s, Source: Axel LEROY

6.2. HFBR

Test 1: Passed, the emitter lights up when the data pin receives 3V3 (see figure 9).

Test 2: Passed, the receiver gives a 1 when it receives a 1 and gives a 0 when it receives a 0 (see figure 8).

Test 3: Not passed, using a low frequency generator and an oscilloscope (see figure 12 and 13). At 200 kb/s, the signal received is still clean and similar to the one sent, but by increasing the bit rate, the cycle duty decreases. At 5 Mb/s, the signal received is completely flat. This issue is due to the transistor that isn't able to commute at such frequencies.

Figure 11: Test 1 of the HFBR, Source: Axel LEROY

Figure 12: Test 3 of the HFBR at 200 kb/s, Source: Axel LEROY

Figure 13: Test 3 of the HFBR at 800 kb/s, Source: Axel LEROY

Figure 14: Test 3 of the HFBR at 5 Mb/s, Source: Axel LEROY

7. Annexe A: Software used

For the schematics and routing, EasyEDA was used. It is a website available for free (https://easyeda.com/).

For the programming, I used Visual Studio Code (version 1.98) and the extension ESP IDF (version 2.0.2)