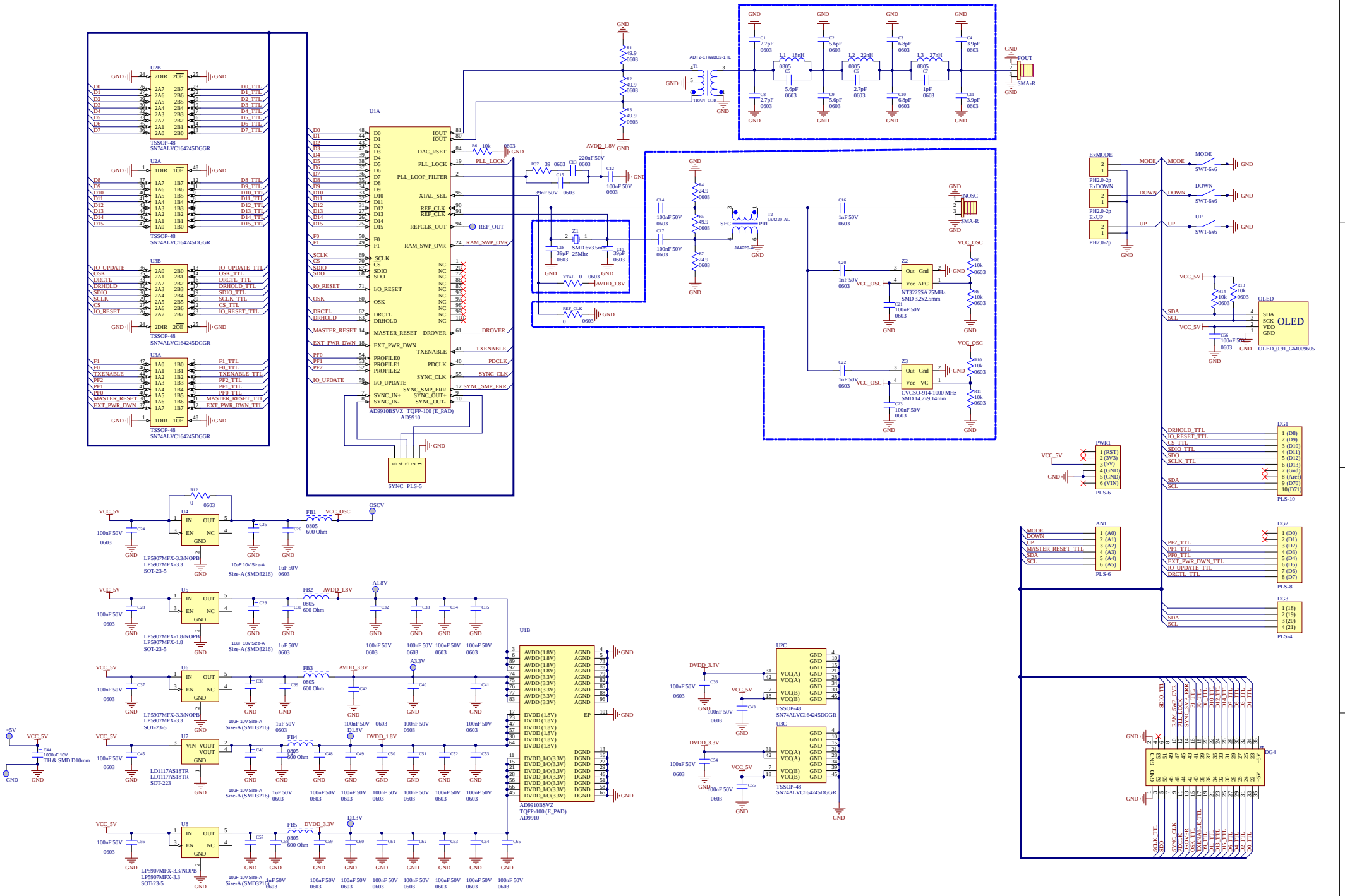

Title	Nixie Clock Schield IN-14 NCS314		
Size: A2	Number:*	Revision:2.2	GRA & AFCH Nixie Clock Schield IN-14 Grisha Anofriev
Date: 29.08.2019	Time: 18:55:27	Sheet * of *	
File: D:\Dropbox\Project\PLL_144MHz\PCB_Shield_DDS9910_v1.0\PCB_Shield_DDS9910.SchDoc			