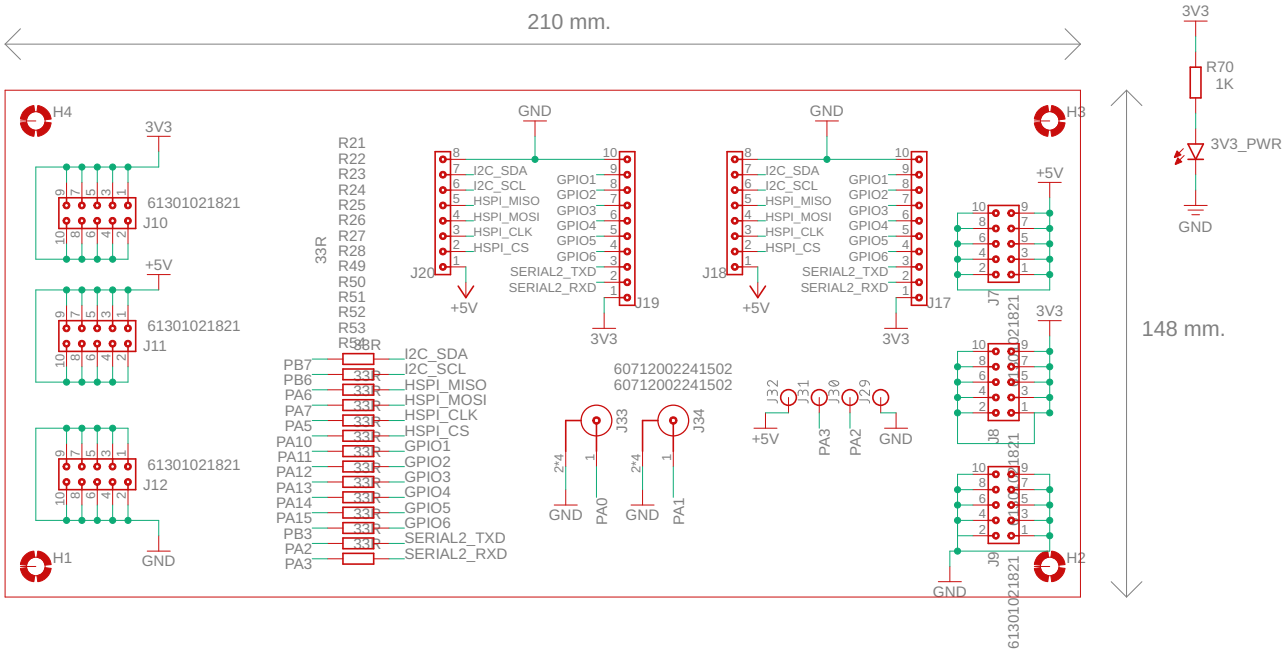

Schematic v61

23-Sep-26 18:05

Sheet: 1/7

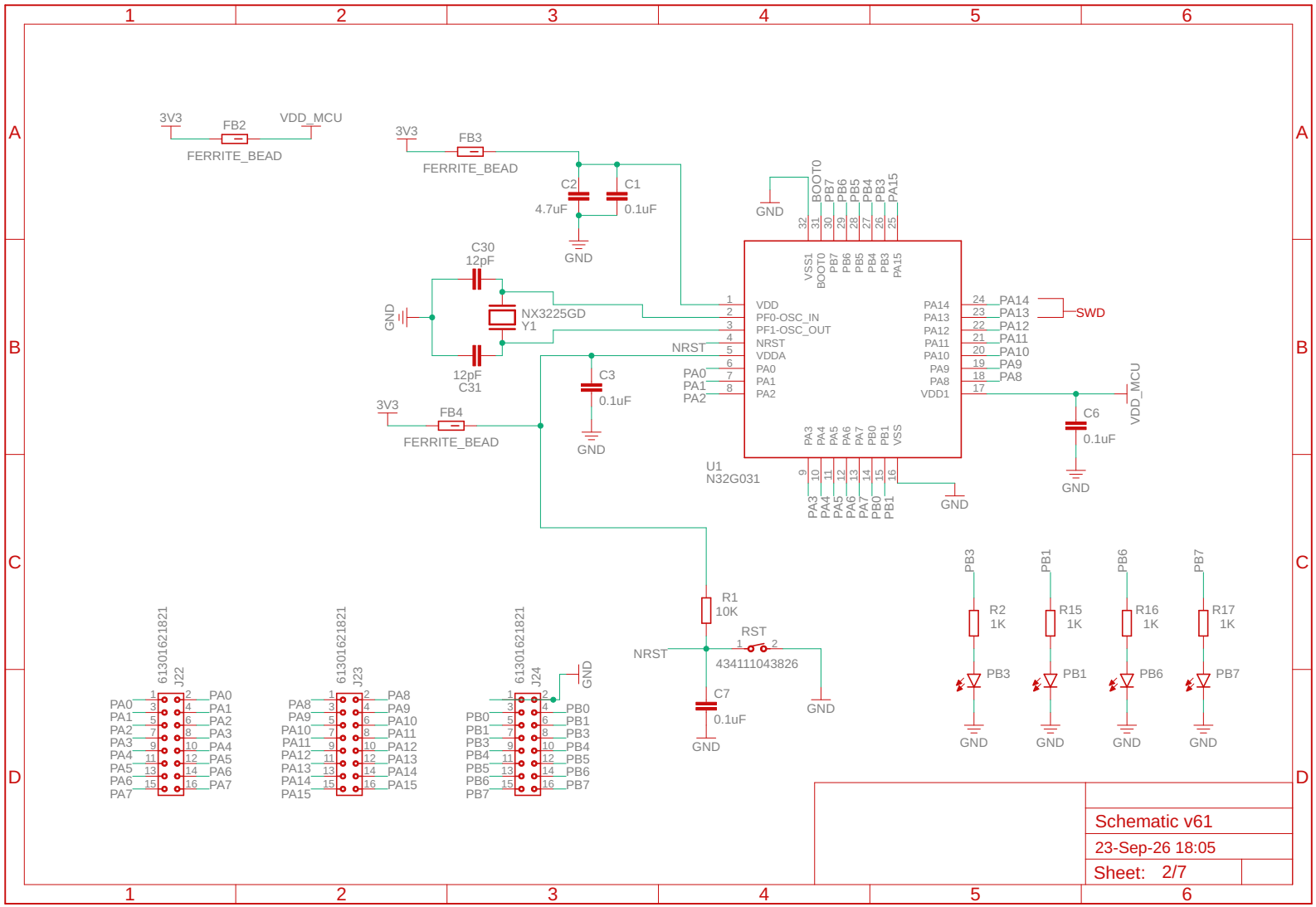

Schematic v61

23-Sep-26 18:05

Sheet: 2/7

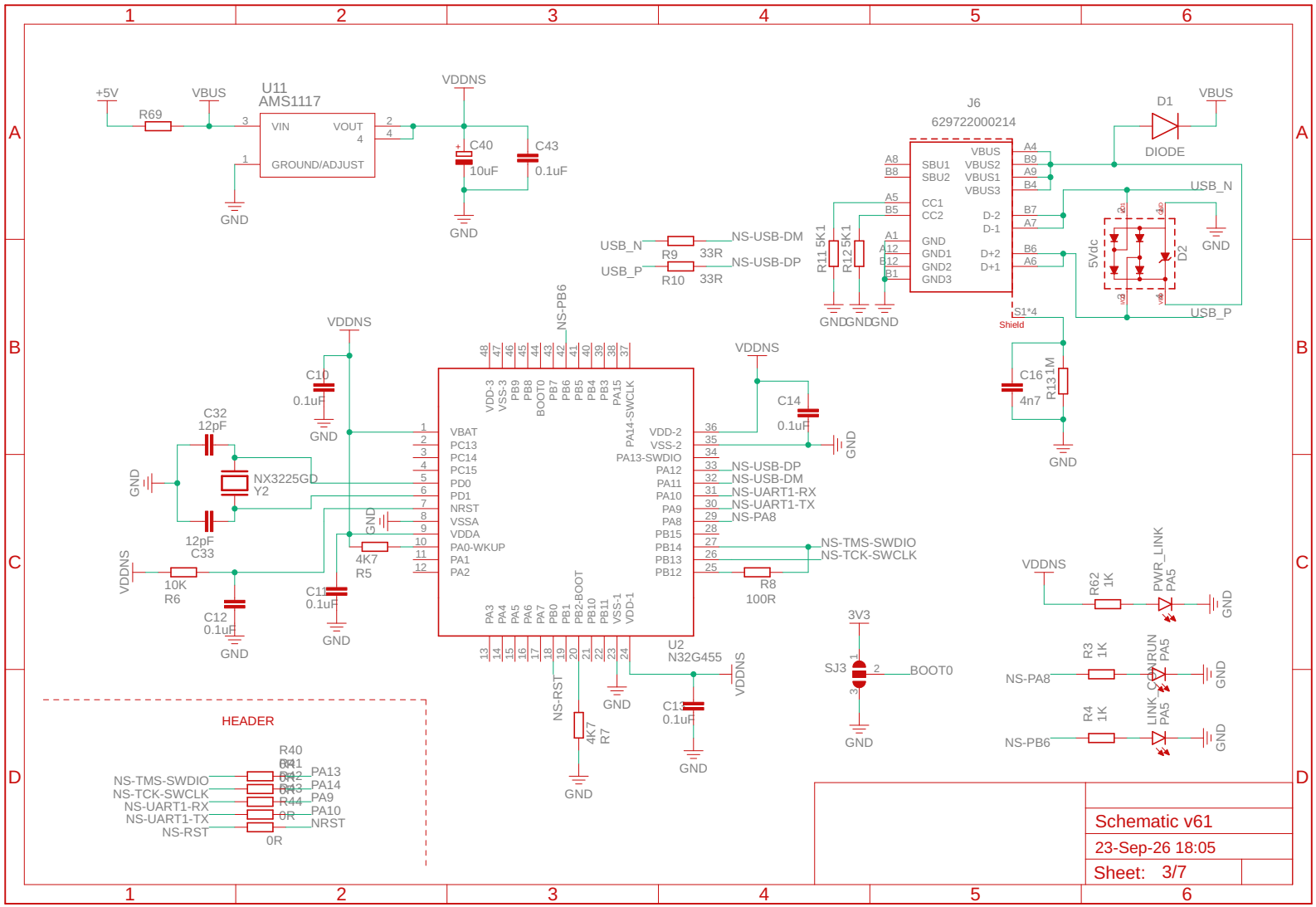

Schematic v61

23-Sep-26 18:05

Sheet: 3/7

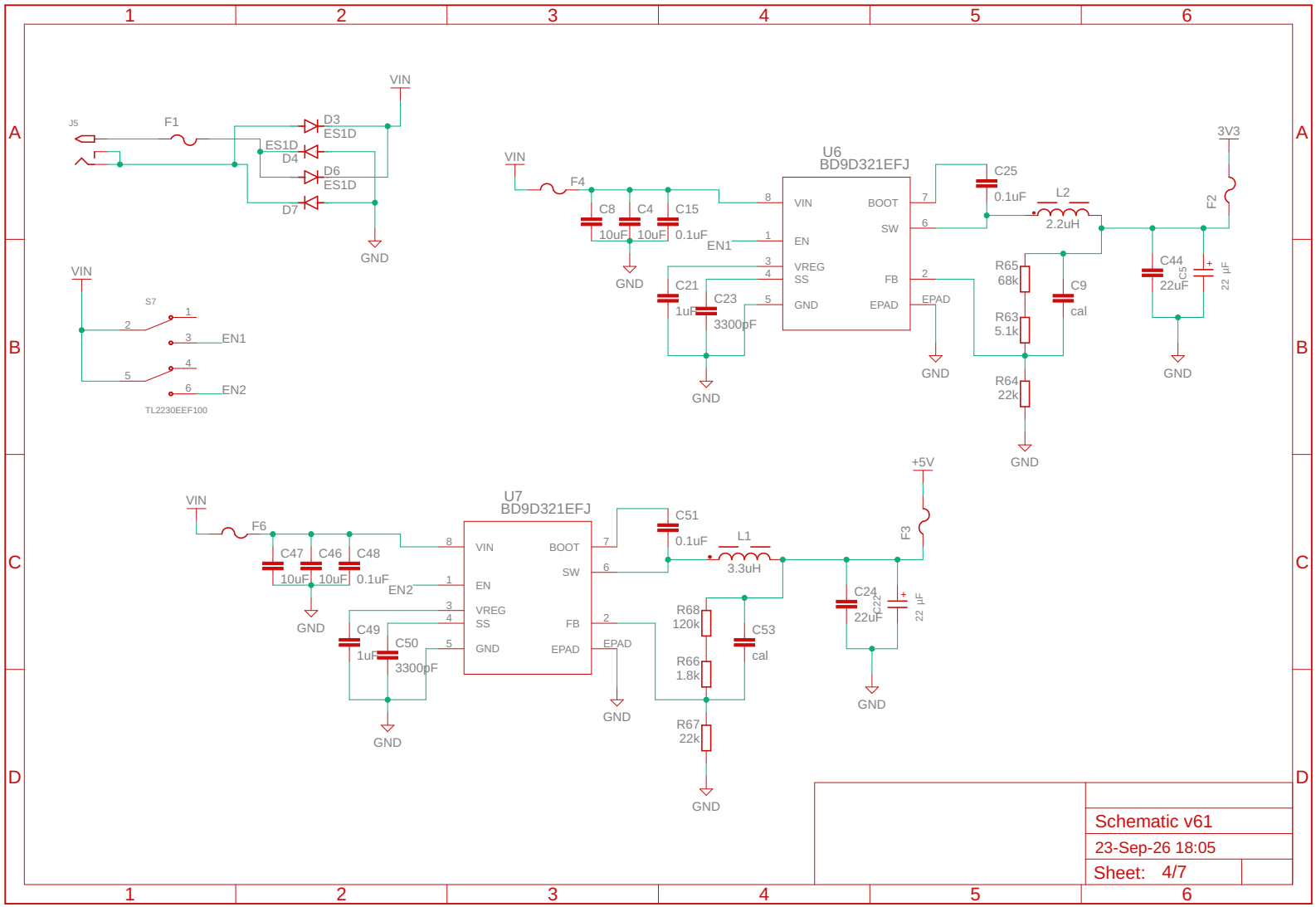

Schematic v61

23-Sep-26 18:05

Sheet: 4/7

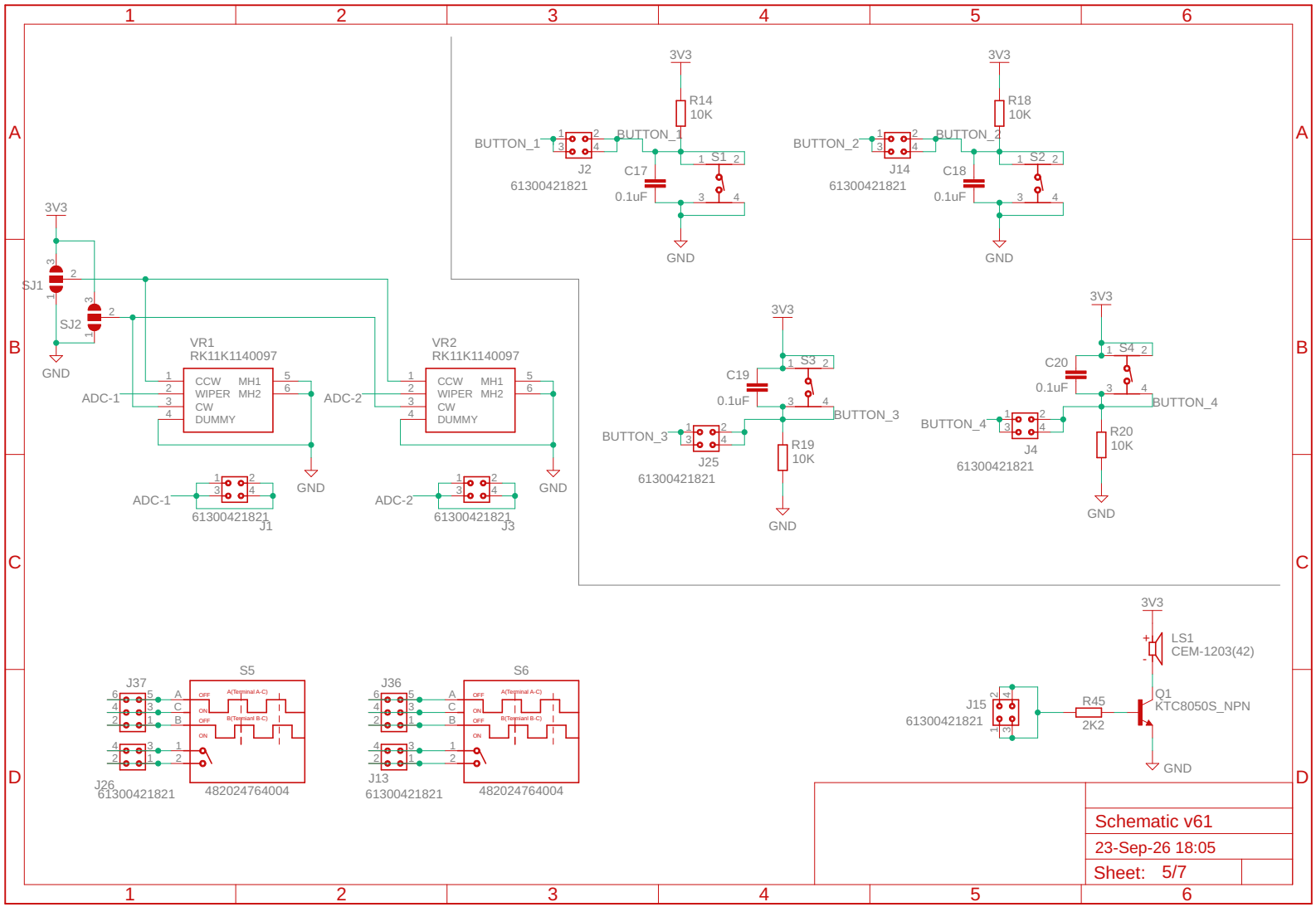

Schematic v61

23-Sep-26 18:05

Sheet: 5/7

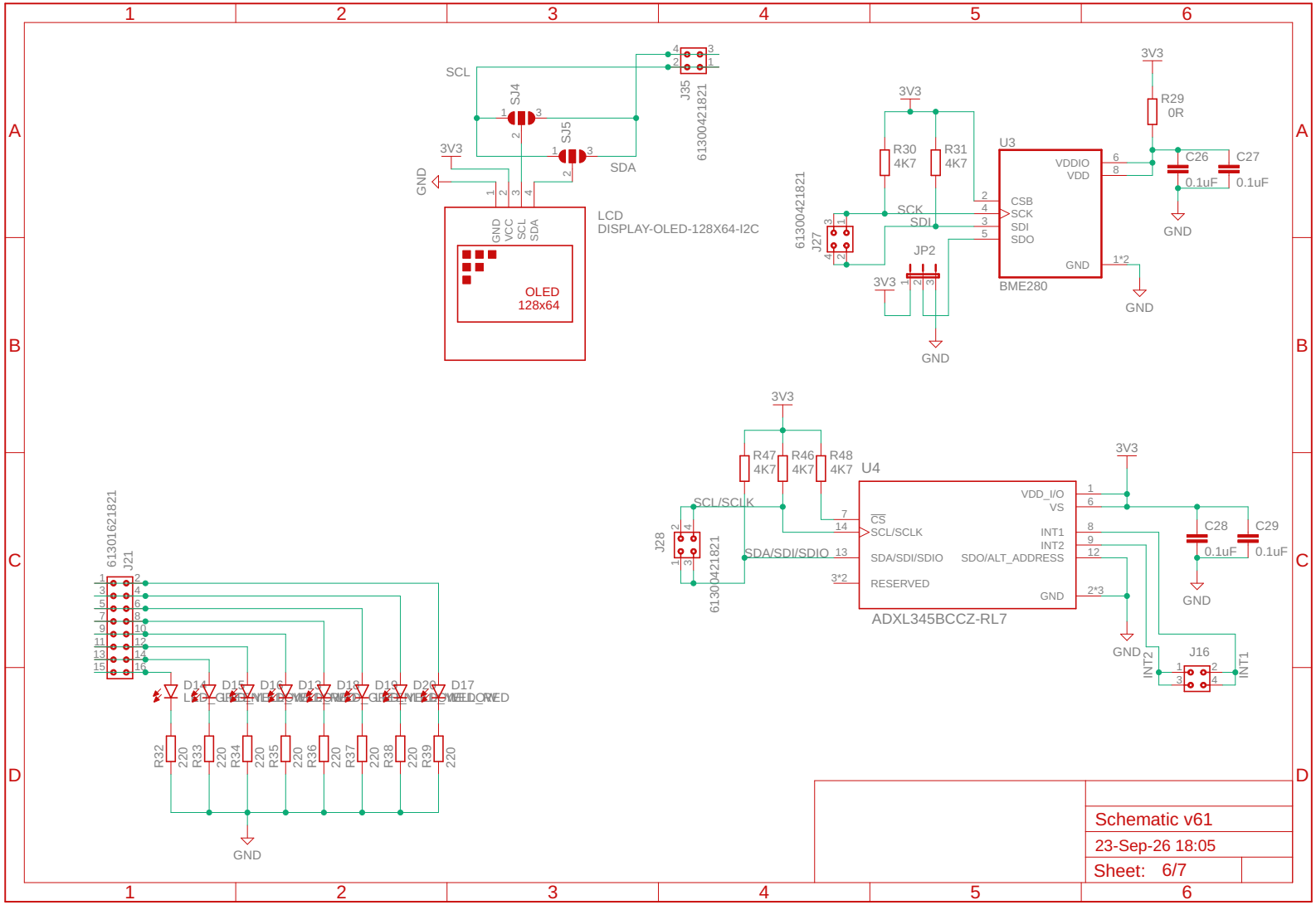

Schematic v61

23-Sep-26 18:05

Sheet: 6/7

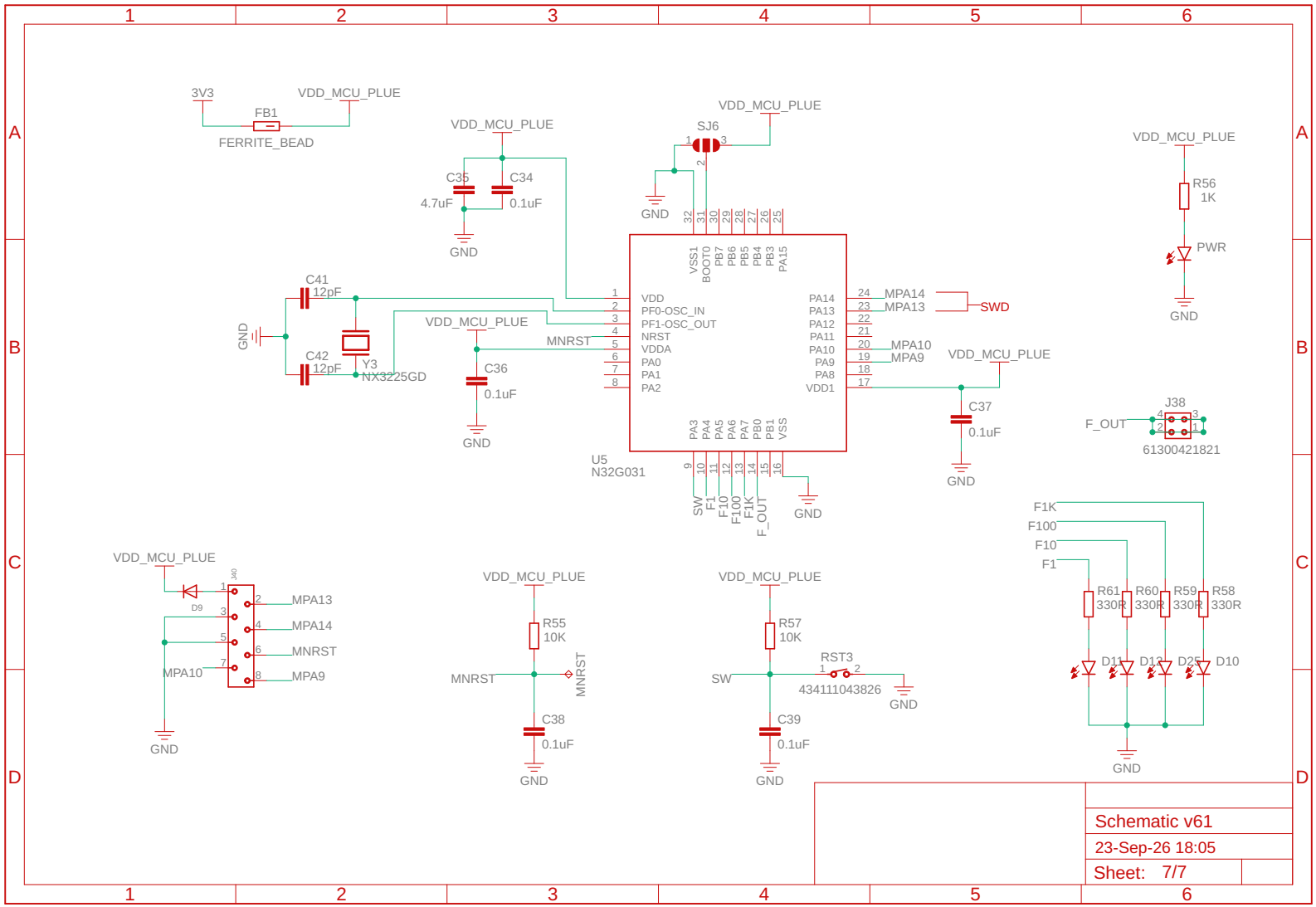
3V3
VDD_MCU_PLUE
FB1
FERRITE_BEAD
VDD_MCU_PLUE
C35
4.7uF
C34
0.1uF
GND
VDD_MCU_PLUE
SJ6
GND
VDD_MCU_PLUE
R56
1K
PWR
GND
C41
12pF
C42
12pF
Y3
NX3225GD
GND
VDD_MCU_PLUE
MNRST
C36
0.1uF
GND
VSS1
BOOT0
PB7
PB6
PB5
PB4
PB3
PA15
VDD
PF0-OSC_IN
PF1-OSC_OUT
NRST
VDDA
PA0
PA1
PA2
PA14
PA13
PA12
PA11
PA10
PA9
PA8
VDD1
MPA14
MPA13
SWD
MPA10
MPA9
VDD_MCU_PLUE
C37
0.1uF
GND
U5
N32G031
PA3
PA4
PA5
PA6
PA7
PB0
PB1
VSS
SW
F1
F10
F100
F1K
F_OUT
GND
J38
F_OUT
61300421821
F1K
F100
F10
F1
R61
330R
R60
330R
R59
330R
R58
330R
D11
D12
D25
D10
GND
VDD_MCU_PLUE
D9
J40
MPA13
MPA14
MNRST
MPA10
MPA9
GND
VDD_MCU_PLUE
R55
10K
MNRST
MNRST
C38
0.1uF
GND
VDD_MCU_PLUE
R57
10K
SW
RST3
434111043826
GND
C39
0.1uF
GND
Schematic v61
23-Sep-26 18:05
Sheet: 7/7