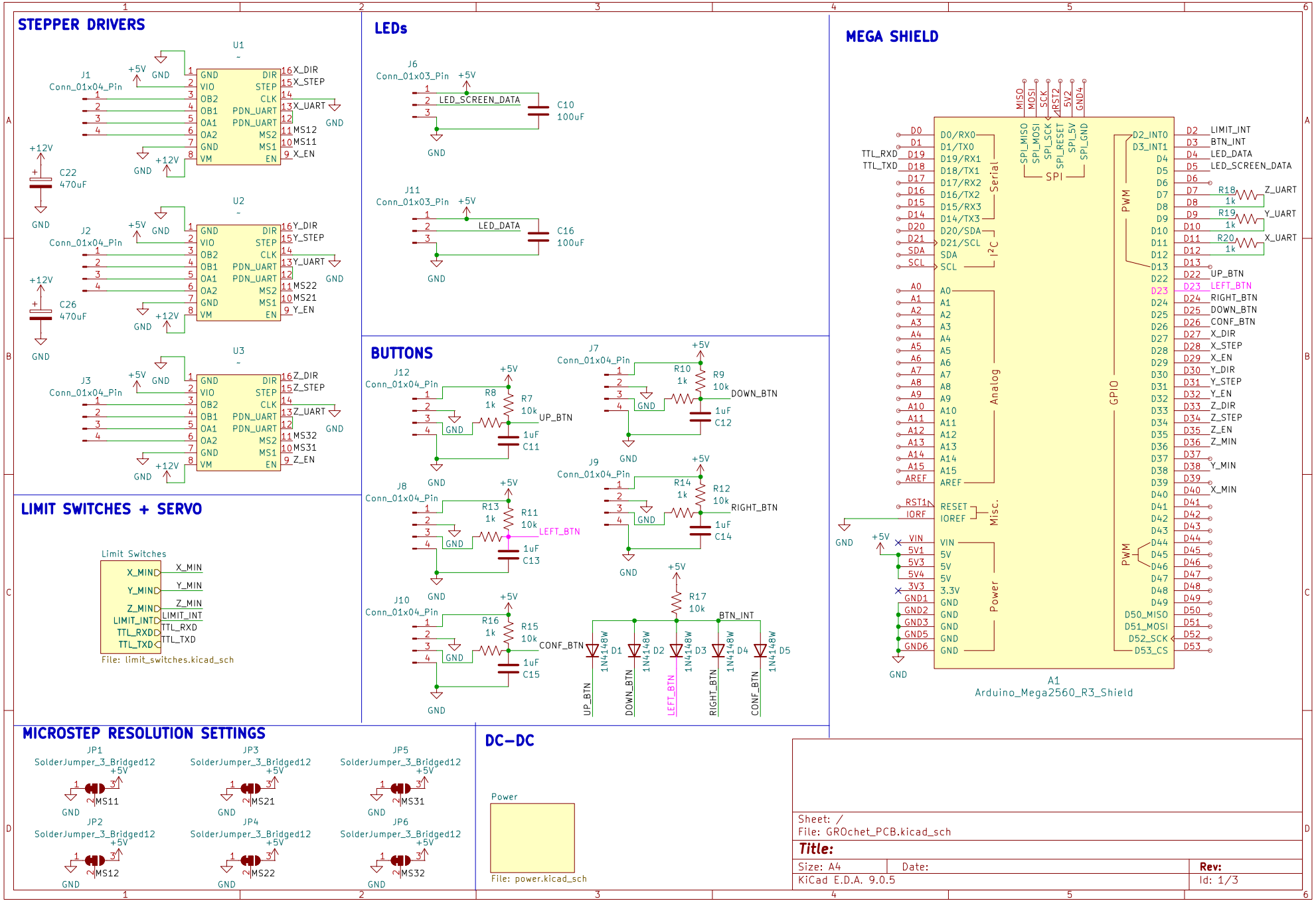
STEPPER DRIVERS
U1
U2
U3
J1 Conn_01x04_Pin
J2 Conn_01x04_Pin
J3 Conn_01x04_Pin
C22 470uF
C26 470uF
+12V
+5V
GND
X_DIR
X_STEP
X_UART
MS12
MS11
X_EN
Y_DIR
Y_STEP
Y_UART
MS22
MS21
Y_EN
Z_DIR
Z_STEP
Z_UART
MS32
MS31
Z_EN
LEDs
J6 Conn_01x03_Pin
LED_SCREEN_DATA
C10 100uF
J11 Conn_01x03_Pin
LED_DATA
C16 100uF
BUTTONS
J12 Conn_01x04_Pin
R8 1k
R7 10k
UP_BTN
C11 1uF
J7 Conn_01x04_Pin
R10 1k
R9 10k
DOWN_BTN
C12 1uF
J8 Conn_01x04_Pin
R13 1k
R11 10k
LEFT_BTN
C13 1uF
J9 Conn_01x04_Pin
R14 1k
R12 10k
RIGHT_BTN
C14 1uF
J10 Conn_01x04_Pin
R16 1k
R15 10k
CONF_BTN
C15 1uF
R17 10k
BTN_INT
D1 D2 D3 D4 D5
1N4148W
LIMIT SWITCHES + SERVO
Limit Switches
X_MIN
Y_MIN
Z_MIN
LIMIT_INT
TTL_RXD
TTL_TXD
File: limit_switches.kicad_sch
MICROSTEP RESOLUTION SETTINGS
JP1 SolderJumper_3_Bridged12
JP2 SolderJumper_3_Bridged12
JP3 SolderJumper_3_Bridged12
JP4 SolderJumper_3_Bridged12
JP5 SolderJumper_3_Bridged12
JP6 SolderJumper_3_Bridged12
DC-DC
Power
File: power.kicad_sch
MEGA SHIELD
A1
Arduino_Mega2560_R3_Shield
Serial
I2C
Analog
Misc.
Power
GPIO
PWM
SPI
MISO
MOSI
SCK
RST2
5V2
GND4
SPI_MISO
SPI_MOSI
SPI_SCK
SPI_RESET
SPI_5V
SPI_GND
TTL_RXD
TTL_TXD
LIMIT_INT
BTN_INT
LED_DATA
LED_SCREEN_DATA
Z_UART
Y_UART
X_UART
UP_BTN
LEFT_BTN
RIGHT_BTN
DOWN_BTN
CONF_BTN
X_DIR
X_STEP
X_EN
Y_DIR
Y_STEP
Y_EN
Z_DIR
Z_STEP
Z_EN
Z_MIN
Y_MIN
X_MIN
D50_MISO
D51_MOSI
D52_SCK
D53_CS
Sheet: /
File: GROchet_PCB.kicad_sch
Title:
Size: A4
Date:
Rev:
KiCad E.D.A. 9.0.5
Id: 1/3

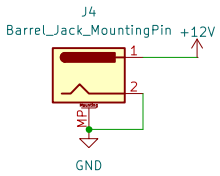

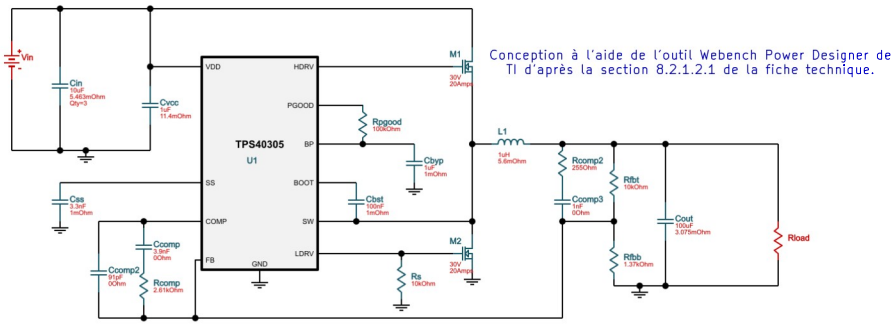

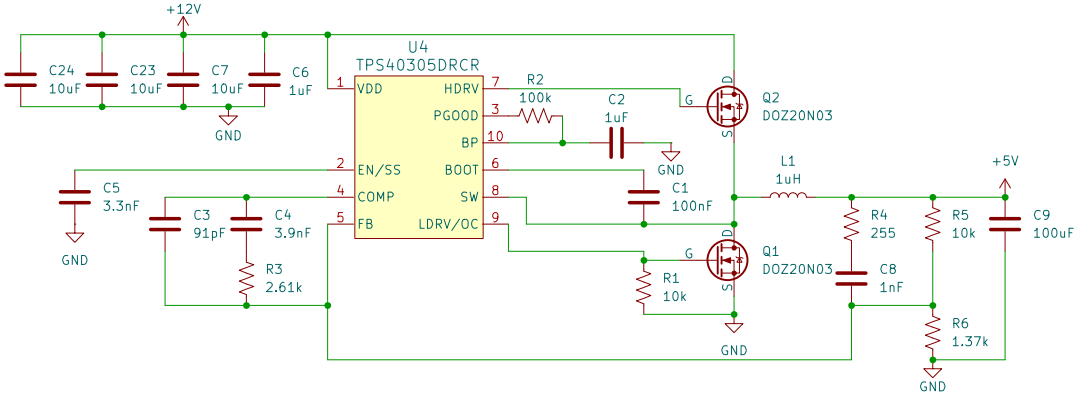

Sheet: /Power/
File: power.kicad_sch

Title:

Size: A4	Date:	**Rev:**
KiCad E.D.A. 9.0.5		Id: 2/3

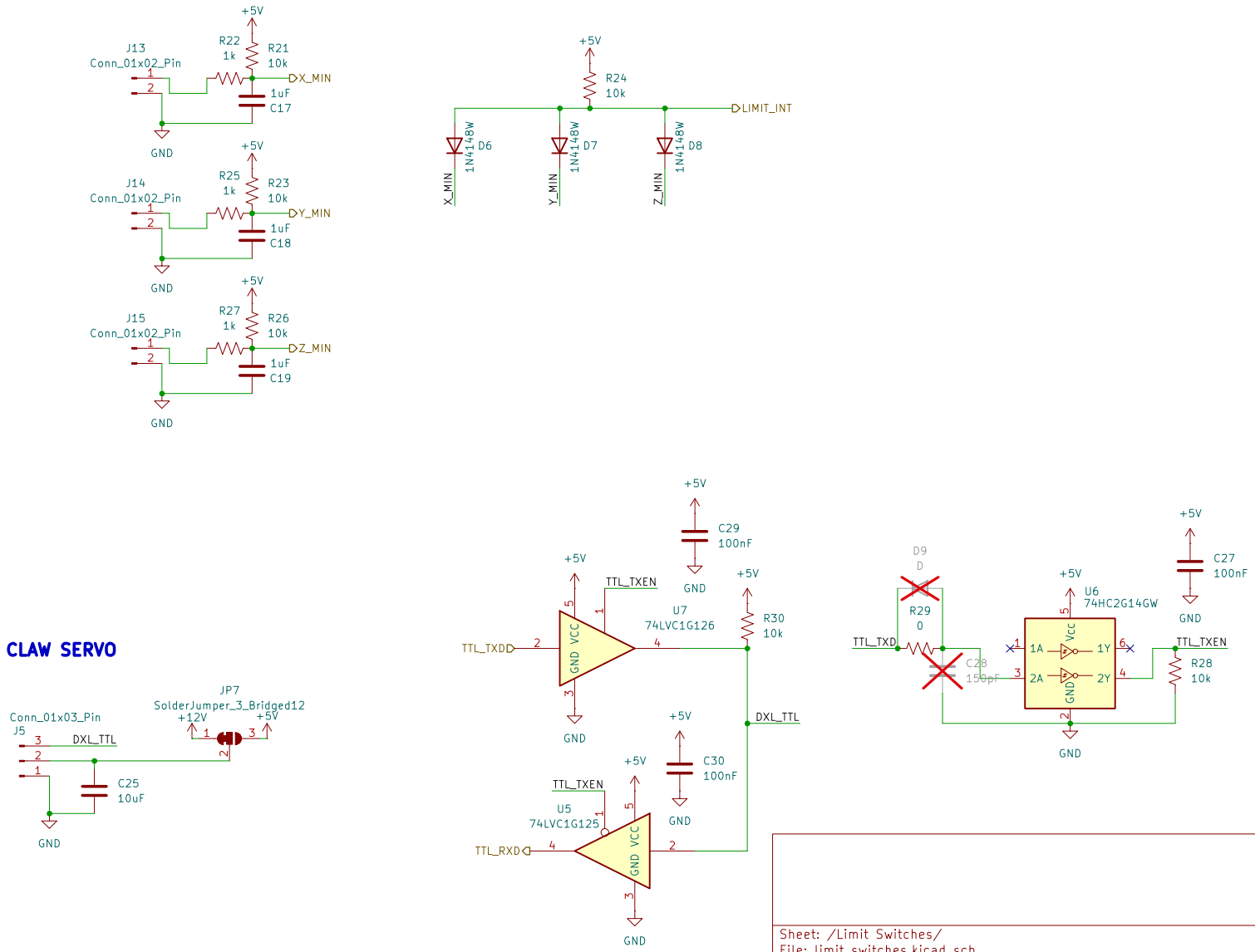

Sheet: /Limit Switches/
File: limit_switches.kicad_sch

Title:

Size: A4	Date:	Rev:
KiCad E.D.A. 9.0.5		Id: 3/3