www.MINEPORTAL.in

(All Mining Solutions)

DOWNLOAD MINEPORTAL APP FROM GOOGLE PLAY STORE

- **ONLINE TEST SERIES FOR**
  - **DGMS COAL/METAL FIRST & SECOND CLASS**
  - **GATE MINING**
  - **COAL INDIA EXAMS**
  - **OTHER PSUs MINING EXAMS**
- **FREE STUDY MATERIAL-MINEPORTAL NOTES & USER NOTES**
- **MINING VIDEO LECTURES**
- **DISCUSSION FORUM**
- **WHATSAPP CHAT SUPPORT FOR MINING EXAMS & QUERY RELATED TO MINING**

CALL/WHATSAPP- 8804777500

VISITING SITE- **www.MINEPORTAL.in** **Facebook-** **www.fb.com/mineportal.in**

EMAIL- INFO@MINEPORTAL.IN

IIT(BHU) VARANASI

STUDENTS' NOTES

TOPIC-OPERATIONAL RESEARCH

www.MINEPORTAL.in

www.MINEPORTAL.in Mine Portal App Available www.fb.com/mineportal.in

Poisson Process

Prob of — n no. of failure in time t

λ failures / unit time

$$p_n(t) = \frac{e^{-\lambda t}(\lambda t)^n}{n!} \qquad n = 0, 1, 2, \ldots$$

Probability of zero failure $= e^{-\lambda t} = R(t)$

$$R_s(t) = \sum_{n=0}^{s} p_n(t)$$

Q. A specially designed weighing m/c has a non repairable motor with a const failure rates of 0.05 failures per yr. The company has purchased two spare motors. If the designed life of wt. m/c is 10 yr, what is the probability that the two spares will be adequate.

$$R_s(t) = \frac{e^{-0.05\times 10}(0.05\times 10)^0}{1} + \frac{e^{-0.05\times 10}(0.5)^1}{1} + \frac{e^{-0.5}(0.5)^2}{2}$$

$$= 0.9856$$

$$R_s(t) = \sum_{n=0}^{2} \frac{e^{-0.5}(0.5)^n}{n!}$$

Redundancy and CFR Model

probability of failure of 1 unit $= 1 - e^{-\lambda t}$

probability of failure of two multiply exclusive system $= (1-e^{-\lambda t}) \cdot (1-e^{-\lambda t})$

$= (1-e^{-\lambda t})^2$

$R(t) = e^{-\lambda t}$

Reliability of the system, $R_s(t) = 1 - (1-e^{-\lambda t})^2$

$1 - 1 + e^{-2\lambda t} + 2e^{-\lambda t}$

$e^{-\lambda t}(2 - e^{-\lambda t})$

$$\lambda_s(t) = \frac{f_s(t)}{R_s(t)} = \frac{-\frac{d R_s(t)}{dt}}{R_s(t)}$$

$$= \frac{2(1-e^{-\lambda t})\lambda e^{-\lambda t}}{1-(1-e^{-\lambda t})^2}$$

$$= \frac{2(1-e^{-\lambda t})\lambda e^{-\lambda t}}{2e^{-\lambda t}(1-0.5e^{-\lambda t})}$$

hazard rate fn, $\lambda_s(t) = \dfrac{\lambda(1-e^{-\lambda t})}{(1-0.5e^{-\lambda t})}$

$MTTF = \frac{3}{2}\lambda$

www.MINEPORTAL.in Mine Portal App Available www.fb.com/mineportal.in

~~Distinguish~~

Distribution used to express time dependent failure of the component :

Weibull
Normal
Lognormal } time dependent

$$\Rightarrow \boxed{\lambda(t) = a t^{b}} \longrightarrow (1)$$

if $a>0$ & $b>0 \longrightarrow \lambda(t)$ increasing

if $a>0$ & $b<0 \longrightarrow \lambda(t)$ decreasing

expressing eqn (1) in a better mathematical form

$$\Rightarrow \boxed{\lambda(t) = \frac{\beta}{\theta}\left(\frac{t}{\theta}\right)^{\beta-1}} \longrightarrow (2)$$

if $\theta>0$, $\beta>0$, $t>0$

θ = scale parameter

β = shape parameter

$$R(t) = \exp\left[-\int_0^t \frac{\beta}{\theta}\left(\frac{t}{\theta}\right)^{\beta-1} dt\right]$$

$$= e^{-\left(\frac{t}{\theta}\right)^{\beta}}$$

$$f(t) = -\frac{dR(t)}{dt} = \frac{\beta}{\theta}\left(\frac{t}{\theta}\right)^{\beta-1} e^{-\left(\frac{t}{\theta}\right)^{\beta}}$$

www.MINEPORTAL.in Mine Portal App Available www.fb.com/mineportal.in

www.MINEPORTAL.in Mine Portal App Available www.fb.com/mineportal.in

Conditions

$\beta < 1$ → PDF is similar in shape to the exponential distribution

$\beta \geq 3$ → PDF is somewhat symmetrical, like normal distribution

for, $1 < \beta < 3$, PDF skewed

$\beta = 1$, $\lambda(t)$ is const, the distribution is identical to exponential with $\lambda = \frac{1}{\theta}$

02/09/15

$\beta = 2$, hazard rate is linear

RAYLEIGH DISTRIBUTION

$$R(t) = e^{-\left(\frac{t}{\theta}\right)^{\beta}}$$

– 63.2% of all weibull failure will occur

θ is called the characteristic life

If θ increases → reliability at a given pt. of time will increase and slope of the hazard rate decreases

$$MTTF = \theta \Gamma\left(1 + \frac{1}{\beta}\right)$$

$$\sigma^2 = \theta^2 \left\{ \Gamma\left(1 + \frac{2}{\beta}\right) - \left[\Gamma\left(1 + \frac{1}{\beta}\right)\right]^2 \right\}$$

Date / /
Page

Q. A compressor experiences wear out with a linear hazard rate for

$$\lambda(t) = \frac{2}{1000}\left(\frac{t}{1000}\right)$$

What is the value of β & θ. Calculate the design life for a reliability of 0.99, MTTF and σ.

Soln

$$\lambda(t) = \frac{2}{1000}\left(\frac{t}{1000}\right) = 2\times10^{-6}\, t$$

$$\theta = 1000, \quad \beta = 2$$

$$R(t) = e^{-\left(\frac{t}{1000}\right)^2} = 0.99$$

$$-\left(\frac{t}{1000}\right)^2 = \ln 0.99$$

$$t = 1000\sqrt{-\ln 0.99}$$

$$t = 100.25 \text{ hr}$$

$$MTTF = 1000\,\Gamma\left(1+\frac{1}{2}\right) = 1000 \times \Gamma(1.5)$$

refer to table in Appendix

$\Gamma(1.5) = 0.88623$

$$MTTF = 886.23 \text{ hr}$$

$$\sigma^2 = 10^6\left\{\Gamma(1+1) - [\Gamma(1.5)]^2\right\}$$

$$= 214601.7$$

$$\sigma = 463.25 \text{ hrs}$$

www.MINEPORTAL.in Mine Portal App Available www.fb.com/mineportal.in

www.MINEPORTAL.in Mine Portal App Available www.fb.com/mineportal.in

Date / /
Page

Weibull Shape Parameter

Value	Property
$0<\beta<1$	Decreasing failure Rate (DFR)
$\beta=1$	CFR, exponential distribution
$1<\beta<2$	IFR, Concave
$\beta=2$	LFR, Rayleigh Distribution
$\beta>2$	IFR, convex
$3\le\beta\le4$	IFR, approaches normal distribution, symmetrical

Q. Given a ~~shape~~ weibull distribution with $\beta=\frac{1}{3}$ (shape parameter)
Completely characterize the failure process – MTTF, median, σ, characteristic life, design reliability for 90% reliability, B1, B·1.

1) $R(t)=\exp\left[-\frac{t}{16000}\right]^{1/3}$

2) $\beta=\frac{1}{3}$, a decreasing failure rate indicating high infant mortality

3) $MTTF = 16000\times\Gamma\left(1+\frac{1}{1/3}\right) = 16000\times 3! = 96000$ hrs

4) $t_{med} = 16000\times(-\ln 0.5)^{1/1/3} = 5328$ hrs
since the distribution is highly skewed, the median provides a better average.

The mode is zero, since $\beta<1$

5) $\sigma^2 = 16000^2\{\Gamma(7)^2-[\Gamma(4)]^2\} = 175.101\times10^6$

~~$\sigma = 418.4\times10^3$~~ $\sigma=$

6) The characteristic life 16000 hrs, 63.2% failure will occur by this time

7) Design life for 90% reliability

$$t_R = 16000\,(-\ln 0.9)^{3} = 18.71$$

8) B1 life = 0.0162 hrs → this indicates a high % of early failures

BURN-IN SCREENING

Conditional Reliability –

$$R(t|T_0) = \frac{\exp\left\{-\left[\frac{(t+T_0)}{\theta}\right]^{\beta}\right\}}{\exp\left\{-\left(\frac{T_0}{\theta}\right)^{\beta}\right\}}$$

testing the component for 10 hrs time

$$R(t_R|10) = 0.9$$

$$\Rightarrow t_R = 101.31 \text{ hours}$$

THREE PARAMETER WEIBULL DISTRIBUTION

$$R(t) = \exp\left[-\left(\frac{t-t_0}{\theta}\right)^{\beta}\right] \qquad t \geq t_0$$

t_0 → location parameter

$$\lambda(t) = \frac{\beta}{\theta}\left(\frac{t-t_0}{\theta}\right)^{\beta-1}$$

www.MINEPORTAL.in Mine Portal App Available www.fb.com/mineportal.in

$$MTTF = t_0 + \theta\Gamma\left(1+\frac{1}{\beta}\right)$$

$$t_{med} = t_0 + \theta(0.6931)^{1/\beta}$$

$$t_{design} = t_0 + \theta(-\ln R)^{1/\beta}$$

Q/ The three parameter Weibull distribution has, $\beta = 4$, $t_0 = 100$ hr and $\theta = 780$ hr. Compute its MTTF, t_{med}, σ and reliability for 500 hr mission.

$\Gamma(1.25) = 0.9064$

$\Gamma(1.5) = 0.88632$

$$MTTF = 100 + 780\,\Gamma(1.125)$$

$$= 806.992 \text{ hr}$$

$$t_{med} = 100 + 780 \times (0.6931)^{1/4} = 811.707 \text{ hr}$$

$$\cancel{= 795.325 \text{ hr}}$$

$$\cancel{t_{design} = t_0 + \theta(-\ln R)^{\frac{1}{4}}}$$

$$\cancel{500 = 100 + 780(-\ln 0.9)^{1/4}}$$

$$\sigma^2 = \theta^2\left[\Gamma(1.5) - [\Gamma(1.25)]^2\right]$$

$$\sigma = 198.494$$

$$R(500) = \exp\left[-\left(\frac{500-100}{780}\right)^4\right]$$

$$= \exp\left[-\left(\frac{20}{39}\right)^2\right]$$

www.MINEPORTAL.in Mine Portal App Available www.fb.com/mineportal.in

www.MINEPORTAL.in Mine Portal App Available www.fb.com/mineportal.in

Date / /
Page

NORMAL DISTRIBUTION

$$f(t) = \frac{1}{\sqrt{2\pi}\,\sigma} \exp\left[-\frac{1}{2} \times \frac{(t-\mu)^2}{\sigma^2}\right] \qquad -\infty < t < \infty$$

μ = mean, σ^2 = variance

$$R(t) = \int_t^{\infty} \frac{1}{\sqrt{2\pi}\,\sigma} \exp\left[-\frac{1}{2}\frac{(t-\mu)^2}{\sigma^2}\right] dt$$

If we take, $\frac{t-\mu}{\sigma} = z \longrightarrow$ Normal distribution with mean 0 and $\sigma = 1$

$$\phi(z) = \frac{1}{\sqrt{2\pi}} e^{-\frac{z^2}{2}}$$

Standardized Normal variation

$$F(t) = \int_{-\infty}^{z} \phi(z)\, dz$$

$$\cancel{R(t)} = \int_{-\infty}^{z}$$

$$R(t) = 1 - \phi\left(\frac{t-\mu}{\sigma}\right)$$

$$\lambda(t) = \frac{f(t)}{R(t)} = \frac{f(t)}{1-\phi\left(\frac{t-\mu}{\sigma}\right)}$$

Q. Wear out failure of an oil drill with $\mu = 120$ drilling hrs, $\sigma = 14$ drilling hours. Drilling occurs for 12 hrs each day. How many days should drilling continue before the o/p stops in order to replace the drill bit if a 95% reliability is desired.

$t_{0.95}$ $\quad Pr\{T \geq t_{0.95}\} = 0.95$

$$Pr\left\{z \geq \frac{t_{0.95} - 120}{14}\right\} = 1 - \phi\left(\frac{t_{0.95} - 120}{14}\right) = 0.95$$

from table (standard normal distribution table)

$1 - \phi(1.64) = 0.94950$

$1 - \phi(1.65) = 0.95053$

$0.00103 \longrightarrow 0.01$

$1 \longrightarrow \frac{0.01}{0.00103}$

$\vdots$

$1 - \phi(-1.6449)$

LOG-NORMAL DISTRIBUTION

$$f(t) = \frac{1}{\sqrt{2\pi}\, St} \exp\left[-\frac{1}{2S^2}\left(\ln\frac{t}{t_{med}}\right)^2\right] \quad t \geq 0$$

$S \rightarrow$ shape parameter

$t_{med} \rightarrow$ location parameter

$$f(t) = \frac{1}{\sqrt{2\pi}\, t\, \sigma_n} \exp\left[-\frac{(\ln t - \mu_n)^2}{2\sigma_n^2}\right]$$

$\mu_n \rightarrow$ mean, $\sigma_n \rightarrow$ SD

www.MINEPORTAL.in Mine Portal App Available www.fb.com/mineportal.in

$$MTTF = t_{med} \exp\left(\frac{s^2}{2}\right)$$

$$t_{mode} = \frac{t_{med}}{\exp(s^2)}$$

$$F(t) = Pr\{T \le t\} = Pr(\ln T \le \ln t)$$

$$= Pr\left[\left\{\frac{\ln T - \ln t_{med}}{s}\right\} \le \left\{\frac{\ln t - \ln t_{med}}{s}\right\}\right]$$

$$= Pr\left\{Z \le \frac{1}{s}\ln\frac{t}{t_{med}}\right\}$$

$$= \phi\left(\frac{1}{s}\ln\frac{t}{t_{med}}\right)$$

$$R(t) = 1 - \phi\left(\frac{1}{s}\ln\frac{t}{t_{med}}\right)$$

FMEA – Failure mode effect analysis

FMECA – Failure mode effect and criticality analysis

FTA – Fault tree analysis

www.MINEPORTAL.in Mine Portal App Available www.fb.com/mineportal.in

www.MINEPORTAL.in Mine Portal App Available www.fb.com/mineportal.in

Date 07/09/15
Page

DESIGN FOR RELIABILITY

Reliability design considers
- LCC of the system
- effect of reliability on system effectiveness

LCC - life cycle cost

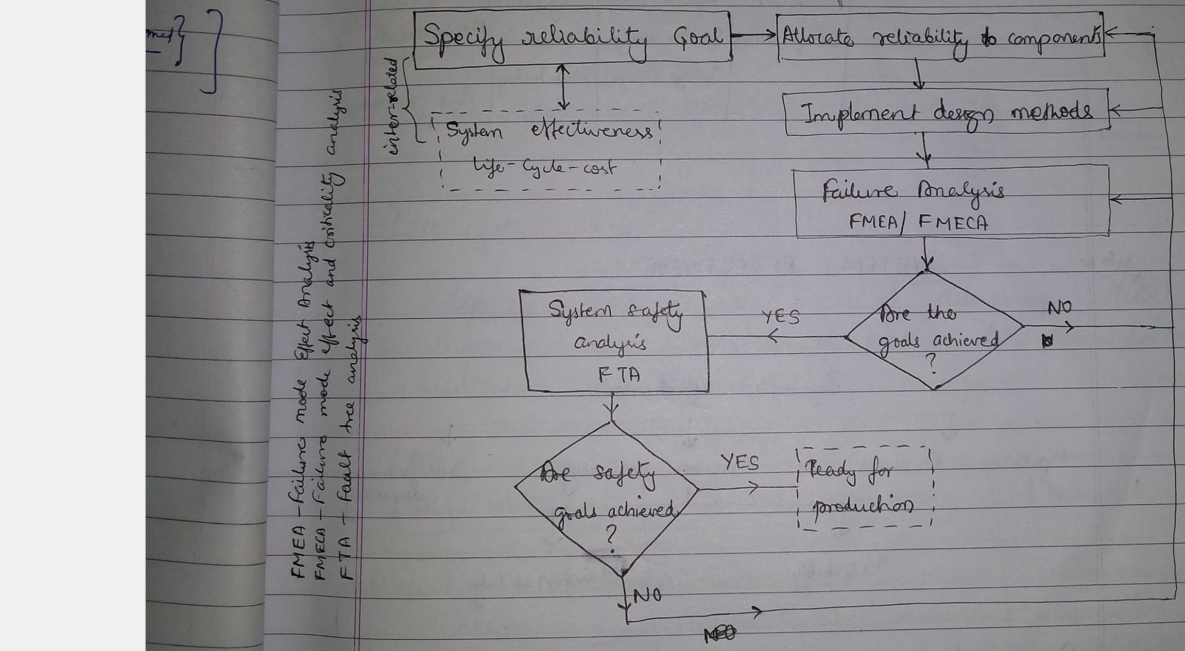

FMEA - Failure mode Effect Analysis
FMECA - Failure mode effect and criticality analysis
FTA - Fault tree analysis

Reliability design process

Typical Product life cycle and Major activities influencing reliability

Development phase	Conceptual Preliminary Design	Detail Design, development and Prototyping	Production and Manufacture	Product use and Support
	Specification Allocation Design methods	Design methods Failure Analysis Growth testing Safety Analysis	Acceptance testing Quality control Burn in period Series testing	Preventive & predictive Maintenance & modification Parts replacement

09/sept/15

SYSTEM EFFECTIVENESS

System effectiveness
- Operational Readiness
- Mission availability
  - Reliability
  - Maintenability
- Design adequacy

System Effectiveness :-
Probability that the system perfectly performs its intended purpose / mission under ~~its~~ ~~opera~~ operated under specified conditions.

Operation Readiness:-
Probability that system is operational when 1st used or at the start of system. The system may or

www.MINEPORTAL.in Mine Portal App Available www.fb.com/mineportal.in

Date / /
Page

may not work at $t=0$, due to its defective coming from the factory or dormant failure.

Design adequacy :-

Defined as the probability that the system will accomplish its mission or fulfil its purpose given that the system is operating within the designed parameters.

System effectiveness = operational readiness × availability × design adequacy

Life cycle costing :-

Life cycle costing is the process of determining all relevant cost from conceptual development to production, utilisation and phase out.

Acquisition cost	O/p and support cost	Phase-out
→ Research and development - Mgmt. - Engg. → Design & prototyping - Engg. Design - Fabrication - Testing & evaluation → Production - Manufacturing - Plant facilities & overhead - Marketing	→ Operations :- Facilities, Operators, consumables (Energy & fuel), unavailable time or down time → Support :- • Repair resources • Supply resources – Repairables, expendables, Tools, test and support equipments → Failure costs → Training → Technical data	→ Salvage value → Disposal cost.

Date / /
Page

Life cycle cost = acquisition cost + operational cost
+ failure cost + support cost
− Net salvage value

Net salvage value = Salvage value − Cost of disposal

P = present value ; i = real or effective discount rate
f = const. annual inflation rate ; e = annual return on investment

~~i × e − f~~

$$\frac{1}{1+i} = \frac{1+f}{1+e}$$

$$P_F(i,d) = \frac{1}{(1+i)^d}$$

F → future amt. at the end of year d

$$P_A(i,d) = \frac{(1+i)^d - 1}{i(1+i)^d}$$

A → an equal amount observed over d year (Annuity Factor → which converts equal payment over d yrs)

Life cycle cost ⇒

$$\boxed{C_u N} + \left[F_D + P_A(i,t_d)\, C_D N\right] + \boxed{P_A(i,t_d)\, C_f \frac{t_o}{MTTF} N}$$

$$+ \left[F_S + P_A(i,t_d)\, C_S N\right] - P_F(i,t_d)\, S N$$

C_u = unit acquisition cost
N = No. of identical unit to be procured

F_o = fixed cost of operating
C_o = annual o/p cost per unit
F_s = fixed support cost
C_s = annual support cost per unit
C_f = cost of failure
t_o = o/p time per ~~unit~~ yr per unit
t_d = design life (yrs)
S = unit salvage value

$\frac{t_o}{MTTF}$ ⇒ frequency of failure

Q. Two designs are being considered for a new product operating ~~for~~ throughout the year and having the following characteristics

Design 1 : $C_u = 1200$, $\lambda_1 = 0.02/yr$
Design 2 : $C_u = 1300$, $\lambda_2 = 0.01/yr$

The design life of product is 10 yrs for both. A failure results in a replacement at the unit acquisition cost (i.e. $C_u = C_f$). Assuming an effective interest rate ~~of~~ 5%. Find out which design will ~~be~~ you prefer.

$$P_A(0.05, 10) = \frac{(1.05)^{10} - 1}{0.05(1.05)^{10}} = 7.7217$$

$$C_u + P_A(i, t_d)\, C_f \frac{t_o}{MTTF}$$

Design 1 : $1200[1 + \{P_A(0.05, 10)\} \cdot 0.02] = 1385.32$

Design 2 : $1300[1 + \{P_A(0.05, 10)\} \cdot 0.01] = 1400.38$

www.MINEPORTAL.in Mine Portal App Available www.fb.com/mineportal.in

www.MINEPORTAL.in Mine Portal App Available www.fb.com/mineportal.in

RELIABILITY ALLOCATION

$$h\left[R_1(t), R_2(t), \ldots, R_n(t)\right] \geq R^*(t)$$

System config

target system MTTF

$$g\left(MTTF_1, MTTF_2, \ldots, MTTF_n\right) \geq MTTR^*$$

$$\prod_{i=1}^{n} e^{-\lambda_i t} \geq e^{-\lambda t}$$

$$\sum_{i=1}^{n} \lambda_i \leq \lambda$$

Allocation Methods :-

1. Equal apportionment
2. Base method
3. ARINC method
4. Repairable systems apportionment
5. AGREE method
6. Feasibility of objectives apportionment technique

Allocation — set the goals for various lower level

System characteristics :-

- Whether system type is repairable or non-repairable
- Predicted failure rates or repair rates of comp. & sub system
- Mission times of sub-system

- Complexity, or in of subsystem based on number of elements
- Other features such as state-of-the-art and envtl. conditions

Simple - little information available

$\lambda_{ai} \rightarrow$ failure rate for i^{th} subsystem
$\lambda_{rs} \rightarrow$ system failure rate
$N \rightarrow$ total no. of sub-systems

$$\lambda_{ai} = \frac{\lambda_{rs}}{N}$$

Goals are not assigned in accordence with the degree of difficulty associated with their achievement.

Base Method

Present rate of failure and the relative difficulty of reducing these failures are known.

weight of ith sub-system $\rightarrow w_i$

$$\sum_{i=1}^{n} w_i = 1 \quad , \quad \lambda_i = w_i \lambda_s$$

ARINC

Aeronautical Research Incorporation
- method based upon previous data, experience
- it assumes that the sub-systems are in series, independent and have const. failure, these
- failure rates can be obtained from other existing failure data or failure ~~data~~ rate prediction standards.

www.MINEPORTAL.in Mine Portal App Available www.fb.com/mineportal.in

- This method reduces sub-system failure rate by equal % ~~to~~ such that the failure rate goal is reached.
- The rational behind the ~~ARR~~ ARINC method is that it requires equal effort to reduce failure rates by an equal % of failure rates.

Even if the effort to reduce the failure rate increases non-linearly with the % of failure rate, it leads to the minimum overall efforts needed to ~~reach~~ achieve the failure rate goal.

$\lambda_i \rightarrow$ present estimated failure rate for i^{th} component

$\lambda^* \rightarrow$ target system failure rate

$$\text{new } A_i = w_i \lambda^*$$

$$\text{where } w_i = \frac{\lambda_i}{\sum_{i=1}^{n} \lambda_i} \qquad i = 1, 2, \ldots, n$$

Therefore, allocated failure rates are proportional to the current failure rates.

Q/ A system which consists of 4 sub-systems in series, it is required to have a reliability of 0.99 for a mission time of 50 hrs, allocate reliability requirements to each of the sub systems, given the following estimates or present sub-system failure rates. $\lambda_1 = 0.004$ failures/hr, $\lambda_2 = 0.007$ failures/hr $\lambda_3 = 0.008$ failures/hr, $\lambda_4 = 0.005$ failures/hr.

www.MINEPORTAL.in Mine Portal App Available www.fb.com/mineportal.in

www.MINEPORTAL.in Mine Portal App Available www.fb.com/mineportal.in

$\lambda_1 = 0.004$ failures

$$\omega_1 = \frac{\lambda_1}{\lambda_1+\lambda_2+\lambda_3+\lambda_4} = 0.1667$$

$$\omega_2 = \frac{\lambda_2}{\lambda_1+\lambda_2+\lambda_3+\lambda_4} = 0.2917$$

$\omega_3 = 0.3333$

$\omega_4 = 0.2083$

$$R^*(50) = e^{-\lambda^* \cdot 50} = 0.99$$

$\Rightarrow \lambda^* = 0.000201$ failure/hr

$\lambda_1' = \omega_1 \times \lambda^* = 0.0000335$ failures/hr

$\lambda_2' = \omega_2 \times \lambda^*$

⋮

$$R_1(50) = e^{-\lambda_1 \times 50} = 0.998328402$$

$R_2(50) =$

AGREE Method

- Advisory Group on Reliability of Electronic Equipment
- This method takes into consideration sub system complexity, mission times & importance.
- It assumes that a system is comprised of n components each having n_i modules or subcomponents.

i^{th} component $\rightarrow n_i$ modules.

- failure rate allocation of sub system is proportional to its complexity and inversely proportional to its mission time & importance.

t = system o/p time

$R^*(t)$ = system reliability goal at time t

n = no. of components

n_i = a complexity no, e.g. the no. of modules within component i

$N = \sum n_i$ = total no. of modules in system

t_i = o/p time of the ith component ($t_i \leq t$)

λ_i = failure rate of ith comp

w_i = probability that the system will fail given comp. 'i' has failed (Importance Index)

~~The approach is~~

$$\left[R^*(t)\right]^{n_i/N}$$

Probability that the system will fail $= w_i\left(1 - e^{-\lambda_i t_i}\right) = 1 - \left[R^*(t)\right]^{n_i/N}$.

$$1 - e^{-\lambda_i t_i} = \frac{1 - \left[R^*(t)\right]^{n_i/N}}{w_i}$$

$$\Rightarrow e^{-\lambda_i t_i} = 1 - \frac{1 - \left[R^*(t)\right]^{n_i/N}}{w_i}$$

$$\Rightarrow -\lambda_i t_i = \ln\left[1 - \frac{1 - \left[R^*(t)\right]^{n_i/N}}{w_i}\right]$$

www.MINEPORTAL.in Mine Portal App Available www.fb.com/mineportal.in

www.MINEPORTAL.in Mine Portal App Available www.fb.com/mineportal.in

Date / /
Page

$$\Rightarrow \lambda_i = -\frac{1}{t_i} \ln\left[1 - \frac{1-[R^*(t)]^{n_i/N}}{w_i}\right]$$

Q. A transceiver has 4 components, a receiver, power supply, transmitter & antenna. Reliability specification require transceiver to o/p 1000 hr & with a reliability of 0.99. The following component data :

Comp.	Importance Index w_i	o/p time t_i in hrs	No. of modules n_i
Receiver	0.8	1000	25
Antenna	1.0	1000	15
Transmitter	0.7	500	23
Power supply	1.0	1000	70
			133

$$(0.99)^{n_i/133}$$

Component	i^{th} comp. contribution to system reliability $[R^*(t)]^{n_i/N}$	failure rate λ_i	MTTF	Comp. reliability

www.MINEPORTAL.in Mine Portal App Available www.fb.com/mineportal.in

Date 14/09/15
Page

This technology was developed in a

Subsystem allocation factors are computed as a function of numerical ratings of system intricacy, state of the art, mission performance time and envtl parameters. Each rating on a scale from 1 to 10 is estimated using engineering judgement based upon experience. Rating values are assigned as follows:

- System intricacy
  This is based on the probable no. of parts or components making up the system and the intricacy of the assembled parts or components. The least intricate system is rated 1, most → 10.
-
  The least developed design or method is assigned 10 and most develp 1.
- Mission performance time
  A continuously o/p element is rated 10 and an element with min. o/p time during mission is rated 1.
- Environmental cond^n
  Elements or components expected to o/p in very severe and harsh envt are rated 10. Those expected to encounter the least severe envt. are rated 1.

1.1.1.1
10.10.10.10

Ratings are usually assigned by cognizant design engg., based upon engg. knowledge and experience. However, they may also be be determined by a group of engg. using a voting method such as Delphi.

An estimate is made of the types of parts and components to be used in the new system and the effect of their expected use on their reliability. If particular comp have proven unreliable in a particular envt., then the envtl. rating is increased accordingly.

The four separate ratings for each subsystem are then multiplied together to give a composite rating for the subsystem. This subsystem rating will be in range 1 to 10^4. The subsystem rating is normalized so that its sum is 1.

1.1.1.1
10.10.10.10

$$\lambda_s T = \sum \lambda_k T$$

$\lambda_k = C_k \lambda_s$ → system failure rate

C_k = complexity of system k

$C_k = \frac{\omega_k}{\omega}$ ω_k = composite rating for subsystem k

$= r_{1k} r_{2k} r_{3k} r_{4k}$

$$\omega = \sum_{k=1}^{n} \omega_k$$

T = mission duration

λ_k = failure rate allocated to the kth subsystem

N = total no. of subsystem

r_{ik} = rating of ith factor for k^{th} sub system when $i = 1, 2, 3, 4$

A, B, C, D, E & F sub system ; Reliability 0.90 for 120 hrs mission intricacy (r_1), state of art (r_2), performance index (r_3), envt (r_4)

	Subsystem	r_1	r_2	r_3	r_4	W_k	C_k	Allocated failure rate (per 10^6 hr)
1	A	5	6	5	5			
2	B	7	6	10	2			
3	C	10	10	5	5			
4	D	8	8	5	7			
5	E	4	2	10	8			
6	F	6	5	5	5			

Repairable system apportionment allocates subsystem failure rate to allow the system to meet an availability objective.

$$\text{availability}, A = \frac{MTTF}{MTTF + MTTR}$$

~~Repairrate of system~~

This technique assumes that all sub-systems are in series with exponential failure distribution and const. repair rate; by determining the ratio of the allocated failure rate to the repair rate for each sub system based on a steady state availability calculation. Failure rate allocation to each subsystem can be determined.

$$A_i = (A_s)^{1/n}$$

R^*

$$\theta_i = \frac{1}{A_i} - 1$$

$$\lambda_i = \theta_i \mu_i$$

A_s = required system availability

A_i = allocated availability to the ith subsystem

n = total no. of subsystems

θ_i = the ratio of allocated failure rate to the repair rate for the ith subsystem

μ_i = repair rate for the ith subsystem

Redundancies in Reliability Allocation

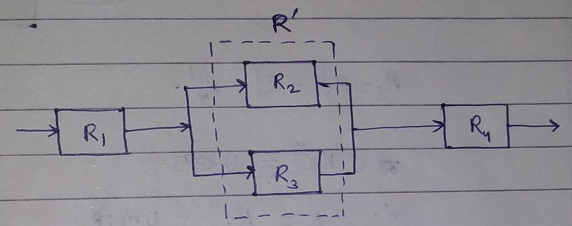

$$R^* = R_1 \times R' \times R_4$$

$$R' = 1 - (1-R_2)(1-R_3)$$

or

$$R' = R_2 + R_3 - R_2 R_3$$

$$\Rightarrow R_2 = \frac{R' - R_3}{1 - R_3}$$

. If we have the knowledge about the reliability of R_3.

If $R_2 = R_3 = R$

$$R' = 2R - R^2$$

$$\Rightarrow R' - 1 = 2R - R^2 - 1$$

$$1 - R' = (1-R)^2$$

$$\boxed{R = 1 - (1-R')^{\frac{1}{2}}}$$

www.MINEPORTAL.in Mine Portal App Available www.fb.com/mineportal.in

Q. Allocate the system reliability goal of 0.95 to the components of following reliability block diagram, assume an equal allocation to each redundancy subset. Each redundant subset contains identical components.

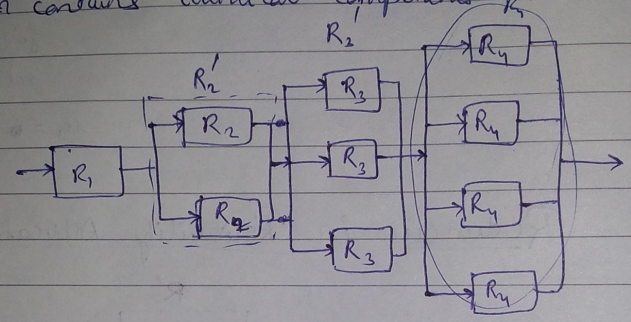

$R_1 = R_2' = R_3' = R_4'$.

$\Rightarrow R_1^4 = 0.95$

$\therefore \quad R = R_1^4 = 0.95$

$\Rightarrow \quad R_1 = 0.98725 \qquad = (0.95)^{\frac{1}{4}}$

now, $R_2 = 1-(1-R_2')^{\frac{1}{2}}$

$R_3 = 1-(1-R_3')^{\frac{1}{3}}$

$R_4 = 1-(1-R_4')^{\frac{1}{4}} = 0.66403$

www.MINEPORTAL.in Mine Portal App Available www.fb.com/mineportal.in

www.MINEPORTAL.in Mine Portal App Available www.fb.com/mineportal.in

Date / /
Page

DESIGN METHODS

Causes of premature failure:
- inadequate design features
- manufacturing and parts defects
- abnormal stress induced during packaging or distribution
- operator or maintenance error
- External conditions (envtl. or operating) that exceed design parameters

Tools than can be used by reliability engg:-
- parts and material selection
- derrating
- stress-strength analysis
- use of technology
- simplification
- redundancy

Redundancy in design

- Active Red.
  - Parallel
  - Load sharing
  - K out of n
- Standby Red.
  - Hot (failure rate remains same during standby)
  - Warm (reduced failure rate during standby)
  - Cold (no failure during standby)

Marginal Analysis:-

The process of identifying the benefits and costs of different alternatives by examining the incremental effect on total revenue by total cost caused by a very small (just one unit) change in the output or input of each alternative.

Marginal analysis supports design making based on marginal or implemental changes based on total or average.

Redundancy optimisation

$R_i(t)$ = Known reliability of component i at time t

n_i = no. of parallel components i (decision variable)

C_i = unit cost of component i

B = budget available for additional unit (redundancy)

m = set of independent component within a system

$$\text{Max.} \quad \prod_{i=1}^{m} \left[1 - \left(1 - R_i(t)\right)^{n_i} \right]$$

subject to the condition

$$\sum_{i=1}^{m} C_i n_i \le B + \sum_{i=1}^{m} C_i \rightarrow \text{sunk cost}$$

$$\text{Max.} \quad \sum_{i=1}^{m} \ln \left[1 - \left(1 - R_i(t)\right)^{n_i} \right]$$

marginal value $\rightarrow$ $$\Delta_i = \frac{\ln\left[1-(1-R_i)^{n_i+1}\right] - \ln\left[1-(1-R_i)^{n_i}\right]}{C_i}$$

ALGORITHM

Step 1 : Set $n_i = 1$, where $i = 1, 2, \ldots, m$ and set cost $= 0$

Step 2 : Compute Δ_i, $i = 1, 2, \ldots, m$

Step 3 : Find max $\{\Delta_1, \Delta_2, \ldots, \Delta_m\}$, call it Δ_k

Step 4 : Set cost = cost + C_k

Step 5 : If cost < B, then set $n_k = n_k + 1$, recompute Δ_k and go to step 3 ; otherwise stop

www.MINEPORTAL.in Mine Portal App Available www.fb.com/mineportal.in

Q. An engg. has an 850 $ budget per system to be used to increase the reliability of a four component series system. The reliability of each component at the desired system lifetime has been established to a reliability growth testing program with the following results.

Component	Reliability	unit cost
1	0.90	$100
2	0.85	$150
3	0.90	$50
4	0.95	$300

Initial reliability of system $= 0.90 \times 0.85 \times 0.90 \times 0.95 = 0.654075$

Step 1 : $n_1 = n_2 = n_3 = n_4 = 1$; cost $= 0$

Step 2 :

$\Delta_1 = 0.000953101798$

$\Delta_2 = 0.000931746282 5$

$\boxed{\Delta_3 = 0.001906203596}$

$\Delta_4 = 0.000162633 8806$

$\max \Delta_i = \Delta_3$

$n_3 = n_3 + 1 = 1 + 1 = 2$

$\text{cost} = \text{cost} + C_3 = 0 + \$50$
$= \$50$

$n_1 = n_2 = n_4 = 1$; $n_3 = 2$

www.MINEPORTAL.in Mine Portal App Available www.fb.com/mineportal.in

www.MINEPORTAL.in Mine Portal App Available www.fb.com/mineportal.in

Identification of failure modes

Failure mode is observable manner in which a component fails eg. fracture.

Determination of causes of failure

Identified failure modes:-

Abnormal stress – usually external or environmental could be an internal power surge

Mechanical stress – continuous vibration may loosen fittings.

Contamination – dirt can cause electrical failure

Evaporation

Fatigue

Friction

Temperature cycling

Ageing and wear out

Substandard and defective parts

Operation and maintenance induced error

Corrosion

Determination of critical failures :-

It is not possible to eliminate every kind of failure, so we have to eliminate critical failures

Assessment of effect of failure :-

The impact, each failure has on operation or status of the system is accessed.

Effect may range from complete system failure to partial degradation to no impact on performance.

When a failure occurs in an redundant unit, system performance is not being immediately affected but system reliability will be reduced.

Classification of severity

Various severity classification may be used
- in absence of adequate data, failure frequency is rated in terms of subjective likelihoods such as expressed by 'frequent', 'probable' over the operating time interval, which may be refined as the system development progresses.

MIL-1980

Level A - frequent → high probability of failure (≥ 0.20)
Level B - probable → moderate " " $(0.2 - 0.1)$
Level C - occassional → marginal " " $(0.1 - 0.01)$
Level D - remote → unlikely " " $(0.01 - 0.001)$
Level E - extremely unlikely → rare event " " (≤ 0.001)

Similarly the severity is observed as one of the four subjective severity levels given by

Level 1 - minor → negligible effects, require extra maintenance but doesnot cause hazard to personnel or system effectiveness

www.MINEPORTAL.in Mine Portal App Available www.fb.com/mineportal.in

Level 2 – major or marginal
possible minor injury & system efficiency may decrease

Level 3 – Critical
possible major injury & system damage leading to shut down failure

Level 4 – Catastrophic
potential loss of life or total system loss

The level of refinement desired in analysis is determined by no. of categories and their delineation

Critical failure modes are those with high failure rate high level of severity. These occurs in the lower right hand corner of the failure mode effect & criticality analysis matrix (FMECA matrix)

FMECA matrix

Severity level	Extremel unlikely	Remote	Occasional	Possible	Frequent
Minor					
Significant/ major					
critical					
Catastrophic					

www.MINEPORTAL.in Mine Portal App Available www.fb.com/mineportal.in

www.MINEPORTAL.in Mine Portal App Available www.fb.com/mineportal.in

Criticality Number

- more qualitative approach
- mostly used in nuclear power plant & aerospace engg.
- it represents the no. of losses per reference time period i.e a year
- it provides a means for each severity level using the expression

$$C_k = \sum_{i=1}^{N} \beta_i \alpha_i \lambda_k t$$

where, N – no. of failure modes for comp. or system A

β_i – it is conditional probability that the system will fail given that

α_i – failure mode ratio or the conditional prob. of failure mode i, given comp. A has failed.

The sum of α_i over its entire failure modes for component A = 1.

$$\sum \alpha_i = 1$$

λ_k – compent failure rate in failures / hr or cycles.

t – t is operating or at risk time of the component or subsystem in the reference time period

Q. The electrical motor of an LHD shows 82 failures per 10^6 hrs of operation. If the motor fails, 80% of the time it is bearing failure, 8% of time ~~brushes~~ fails open, 4% of time coils fails open, 6% of the time coil fail short and 2% cases the failure is due to broken shaft. If the bearing fails, the LHD will be unable to o/p, 50% of the time. In 40% cases of bearing failures, performance degraded to 50% and there is no effect on performance in 10% cases. If its brushes fail, it will not be o/p^{nl} in 90% of cases and in 10% of time performance degraded to 50%. The LHD is not o/p^{nl} when winding fails, both in open and short mode. Broken motor shaft doesnot allow m/c to operate. Mission time is 8000 hr. Perform a quantitative criticality analysis for the electrical motor of the LHD.

FMECA method have no absolute meaning as it doesnot attach actual values to the consequences. Instead the FMECA uses a comparative approach with the failure modes so as to identify those failure modes, critical to the system. The failure modes which have been identified as critical for a component or the system might then be subjected to further study, or the component might be replaced by more reliable component or might be subject to increased monitoring or the system may need to be redesigned.

It is a
independe
otherwise
complexi

www.MINEPORTAL.in Mine Portal App Available www.fb.com/mineportal.in

It is assumed in the FMECA that, there is independence b/w the components or sub-systems, otherwise dependence will add significantly to the complexity of the analysis.

www.MINEPORTAL.in Mine Portal App Available www.fb.com/mineportal.in