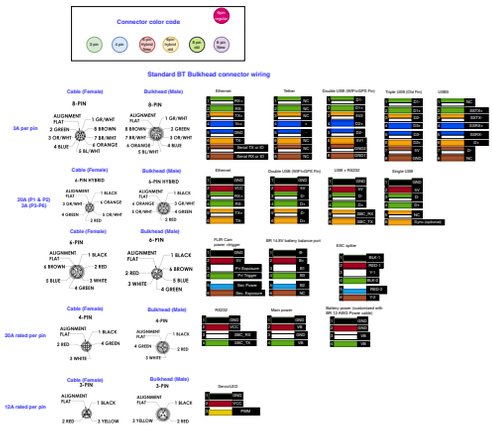

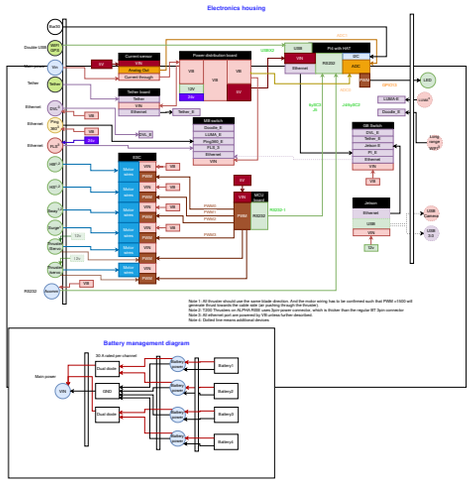
Electronics housing
BLACK
Double USB
WPS USB
Twitter
RC
Twitter
Ethernet
DAL
Ethernet
Ping Sky
Ethernet
ALIF
HBF
HBF
Power
Power
Power