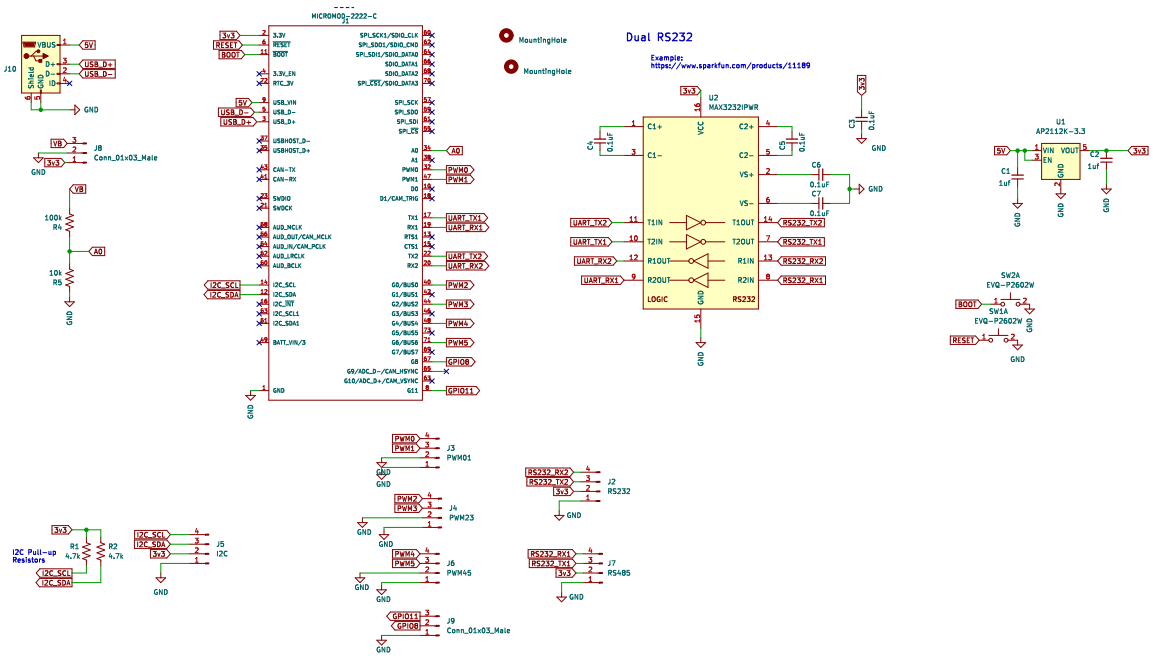
Dual RS232
Example:
https://www.sparkfun.com/products/11189
MicroMod-2222-C
J1
J10
J8
Conn_01x03_Male
MOUNTINGHOLE
MOUNTINGHOLE
U2
MAX3232IPWR
C1+
C1−
VCC
C2+
C2−
VS+
VS−
T1IN
T2IN
R1OUT
R2OUT
LOGIC
GND
T1OUT
T2OUT
R1IN
R2IN
RS232
C4
C5
C6
C7
C3
0.1uF
UART_TX2
UART_TX1
UART_RX2
UART_RX1
RS232_TX2
RS232_TX1
RS232_RX2
RS232_RX1
3V3
GND
U1
AP2112K-3.3
VIN
VOUT
EN
C1
1uF
C2
1uF
5V
SW2A
EVQ-P2602W
SW1A
EVQ-P2602W
BOOT
RESET
J3
PWM01
J2
RS232
J4
PWM23
J6
PWM45
J7
RS485
J9
Conn_01x03_Male
J5
I2C
I2C Pull-up
Resistors
R1
4.7k
R2
4.7k
I2C_SCL
I2C_SDA
PWM0
PWM1
PWM2
PWM3
PWM4
PWM5
GPIO8
GPIO11
A0
VB
100k
R4
10k
R5