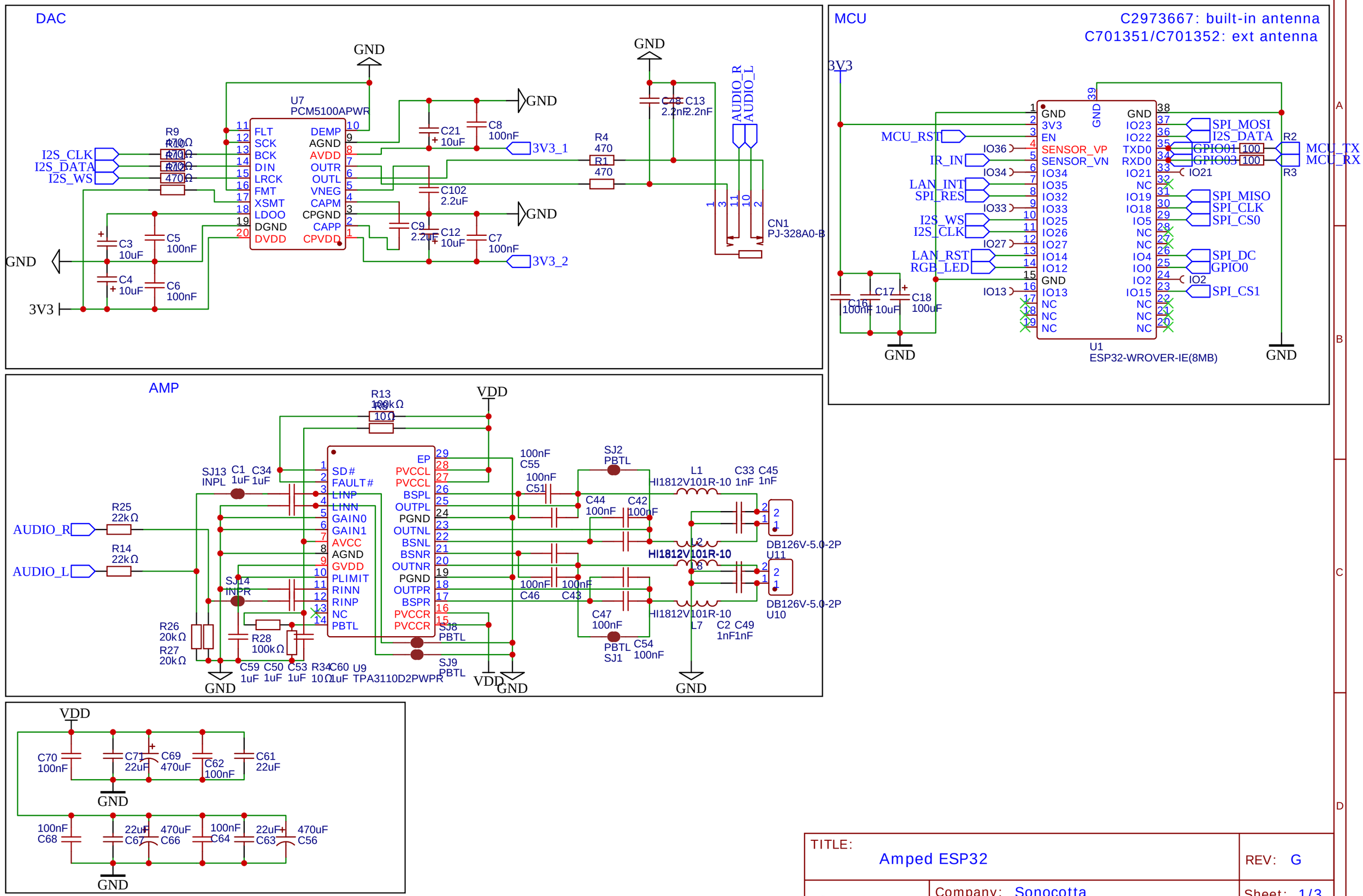

TITLE: Amped ESP32	REV: G
Company: Sonocotta	Sheet: 1/3
Date: 2024-01-17 Drawn By: andriy@sonocotta.com	

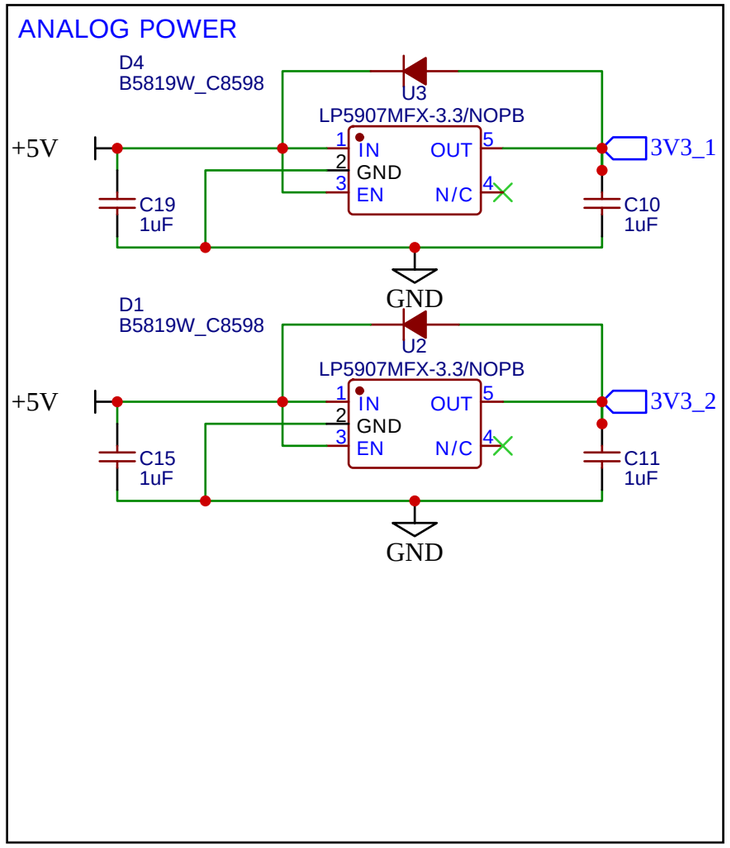

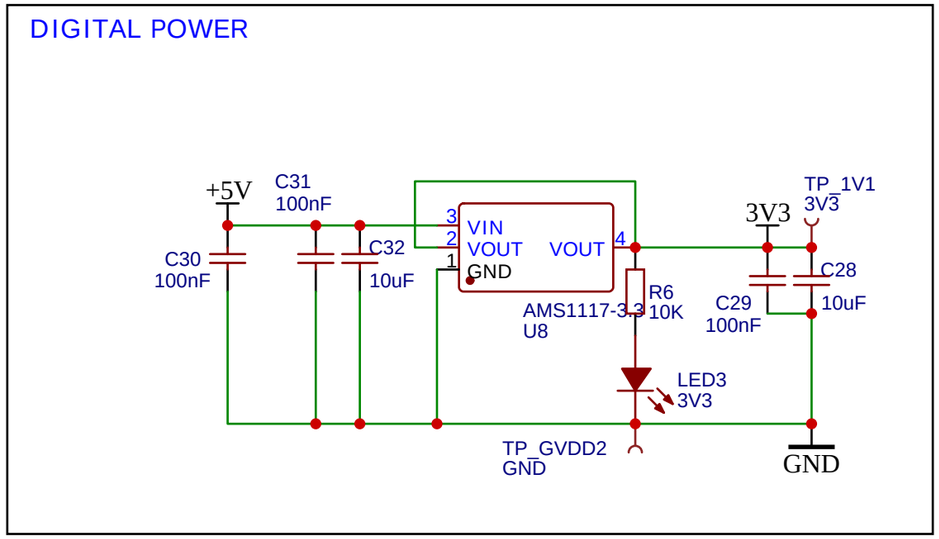

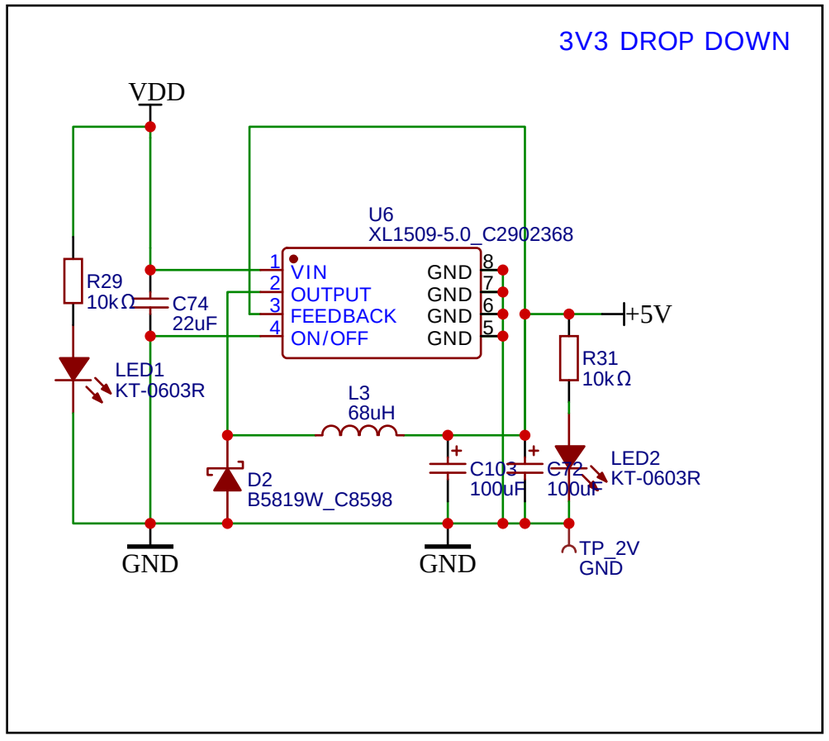

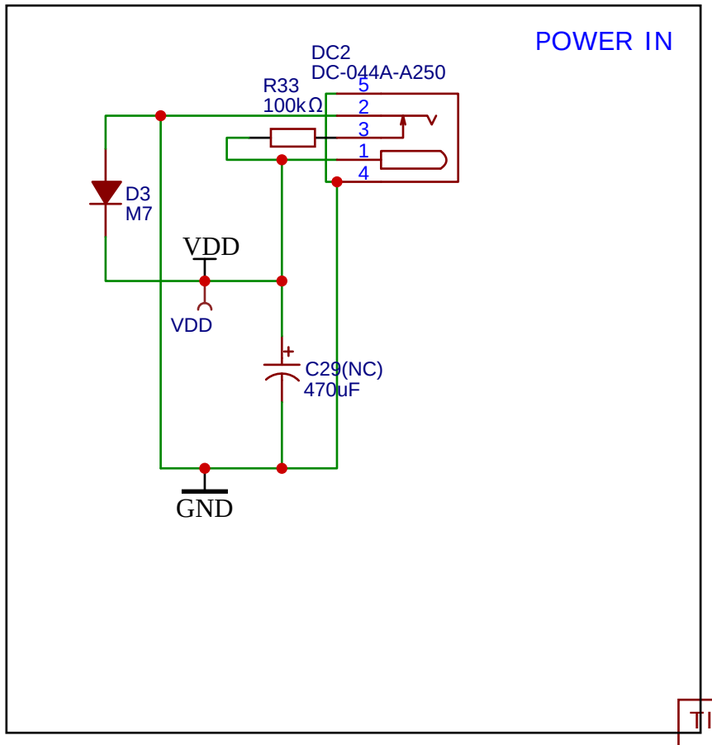

TITLE: Amped ESP32	REV: G
Company: Sonocotta	Sheet: 2/3
Date: 2025-03-10	Drawn By: andriy@sonocotta.com

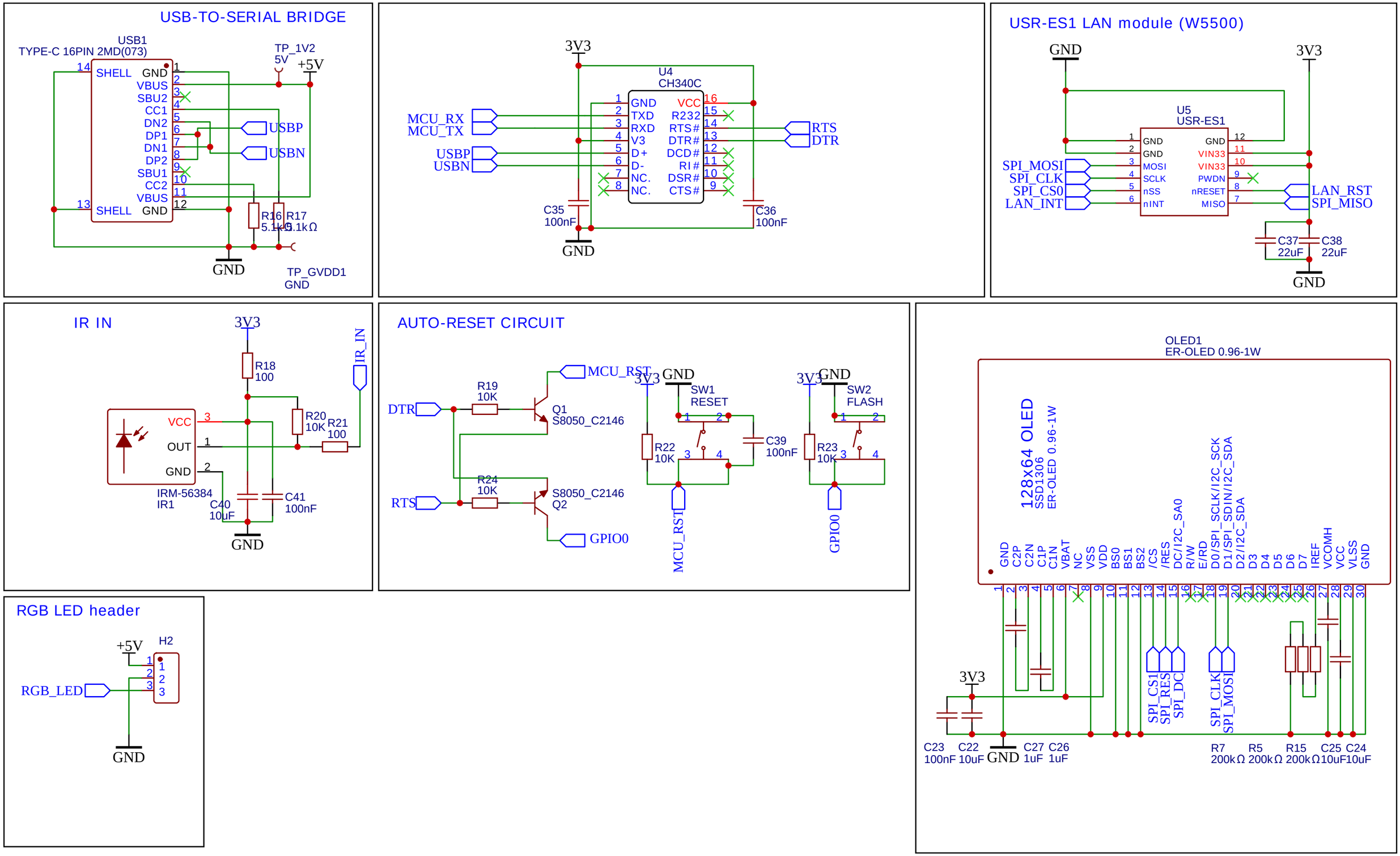

TITLE: Amped ESP32	REV: G
EasyEDA	Company: Sonocotta
	Sheet: 3/3
	Date: 2025-01-17
	Drawn By: andriy@sonocotta.com