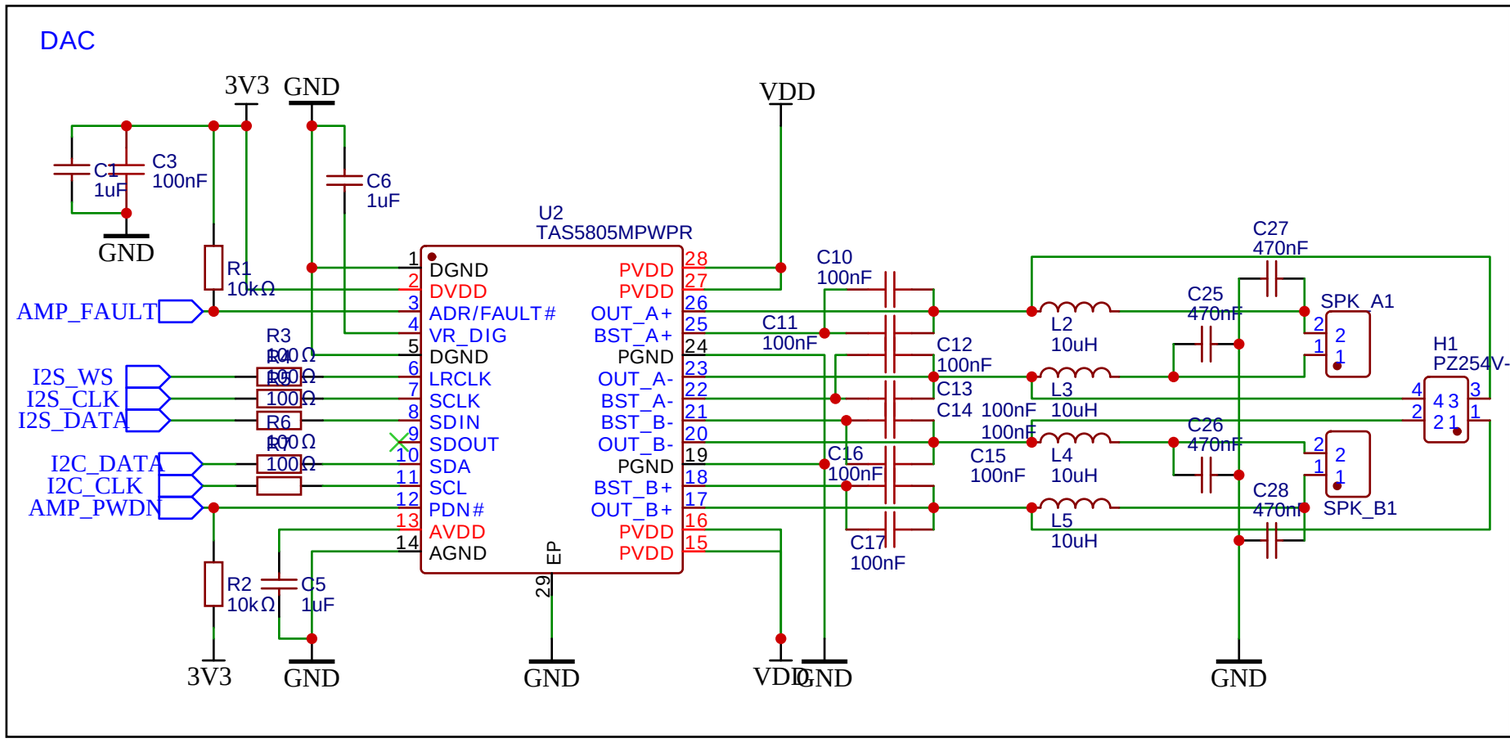

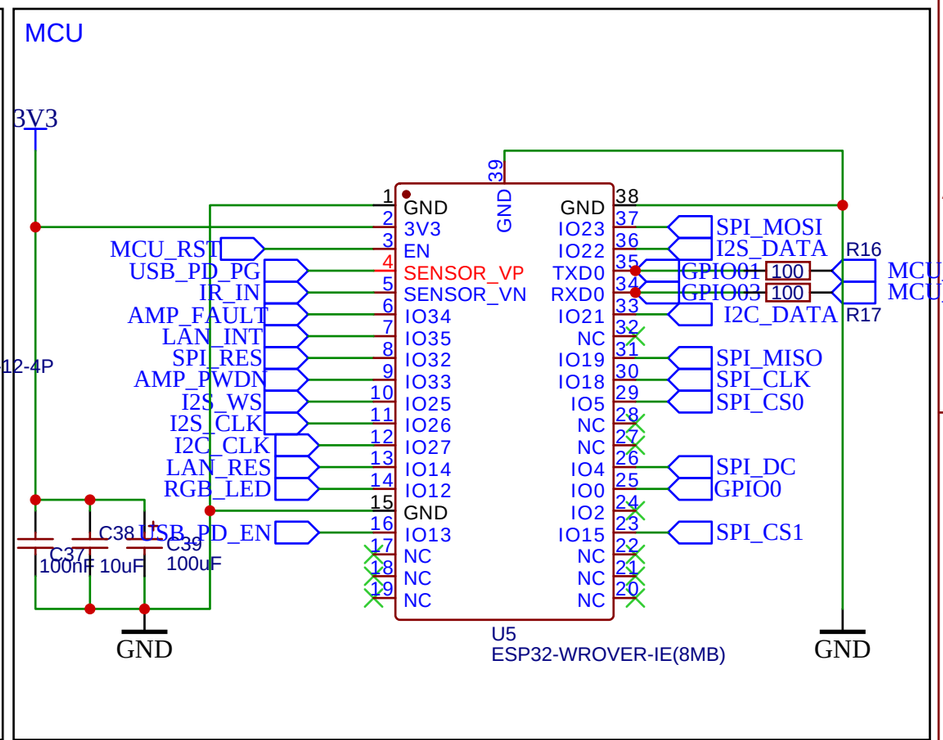

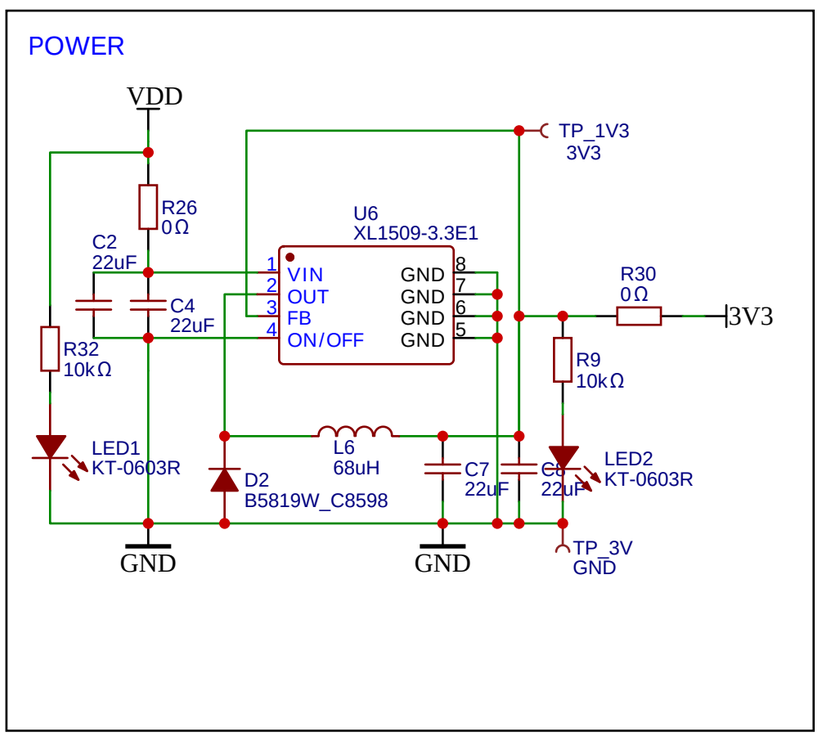

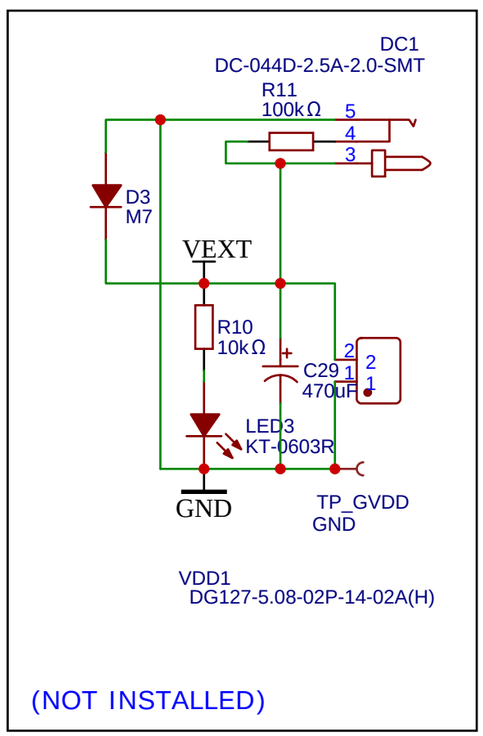

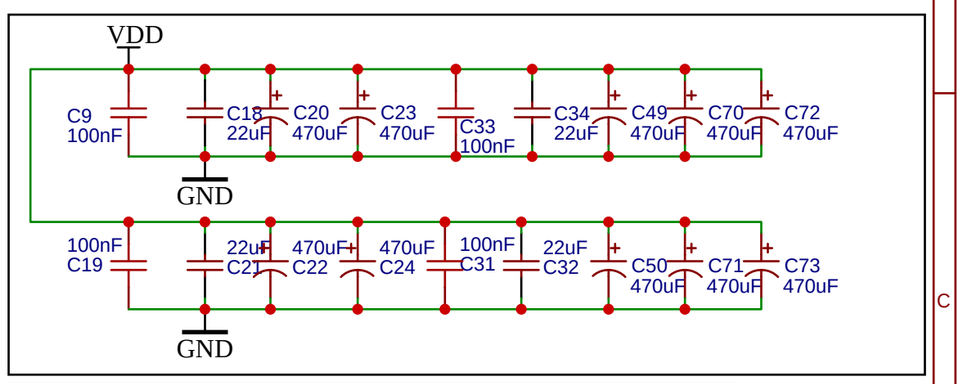

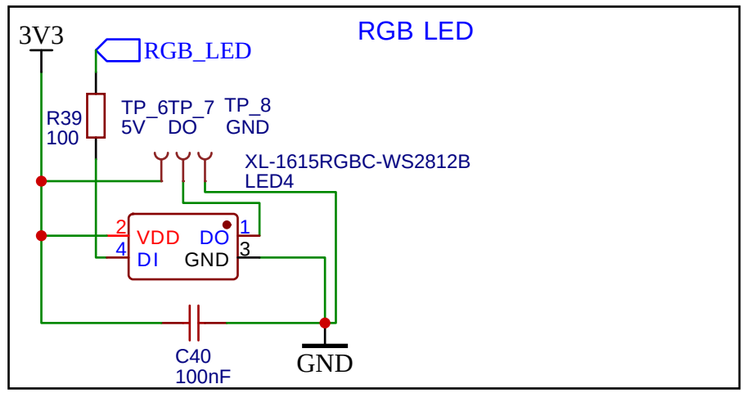

TITLE: Louder Esparagus	REV: G1
Company: Sonocotta	Sheet: 1/3
Date: 2023-04-20	Drawn By: andriy@sonocotta.com

嘉立创EDA

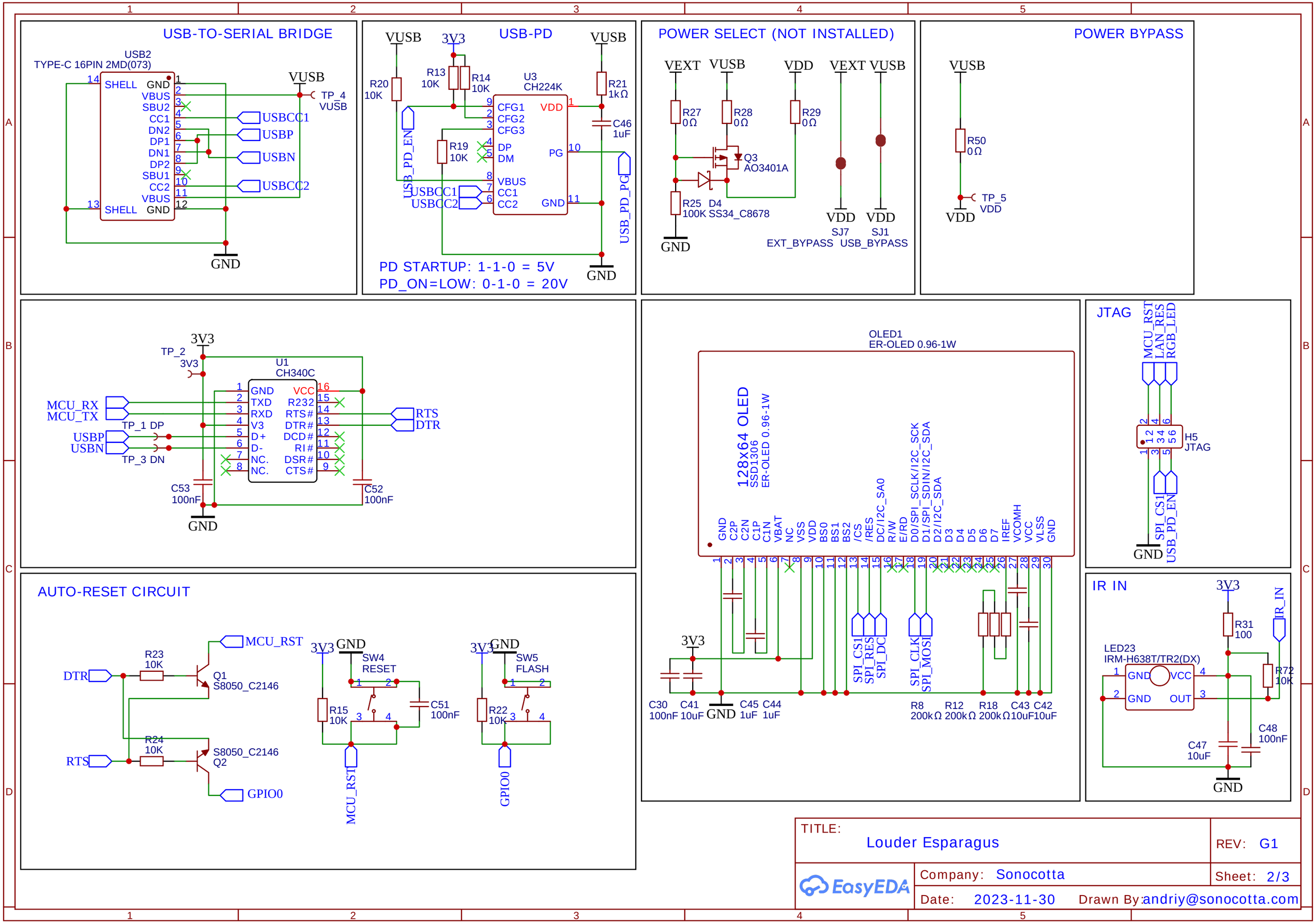

TITLE: Louder Esparagus

REV: G1

Company: Sonocotta

Sheet: 2/3

Date: 2023-11-30

Drawn By: andriy@sonocotta.com

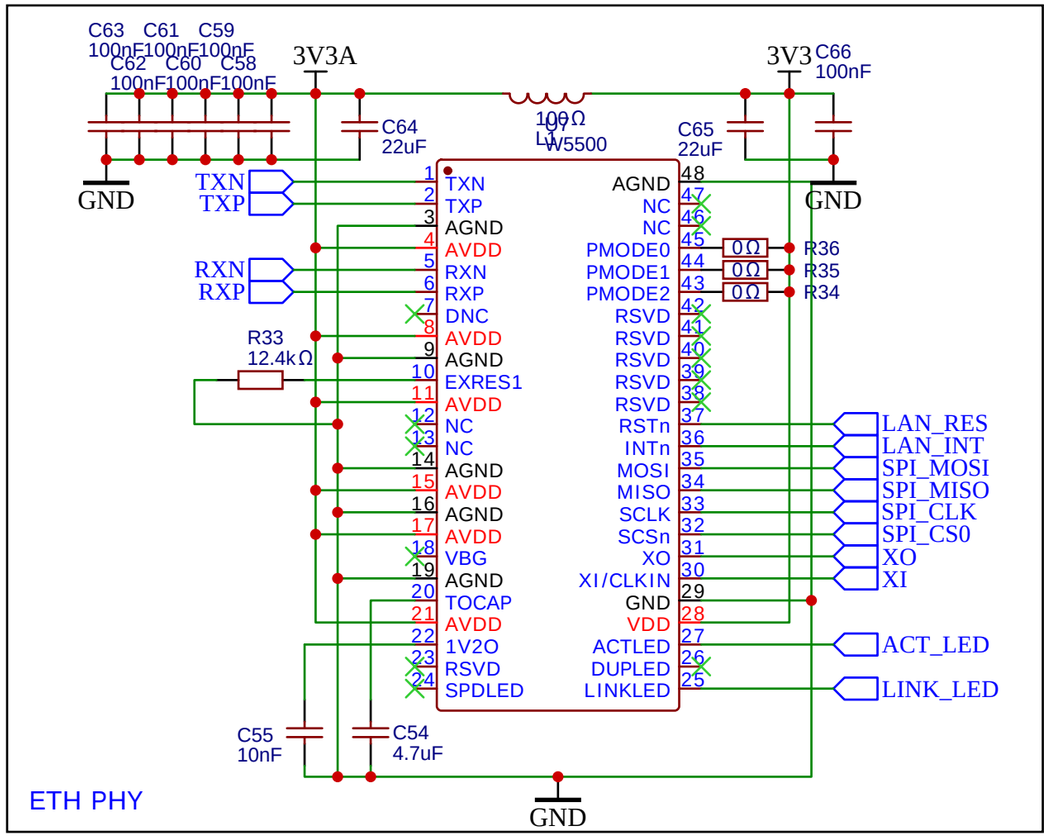

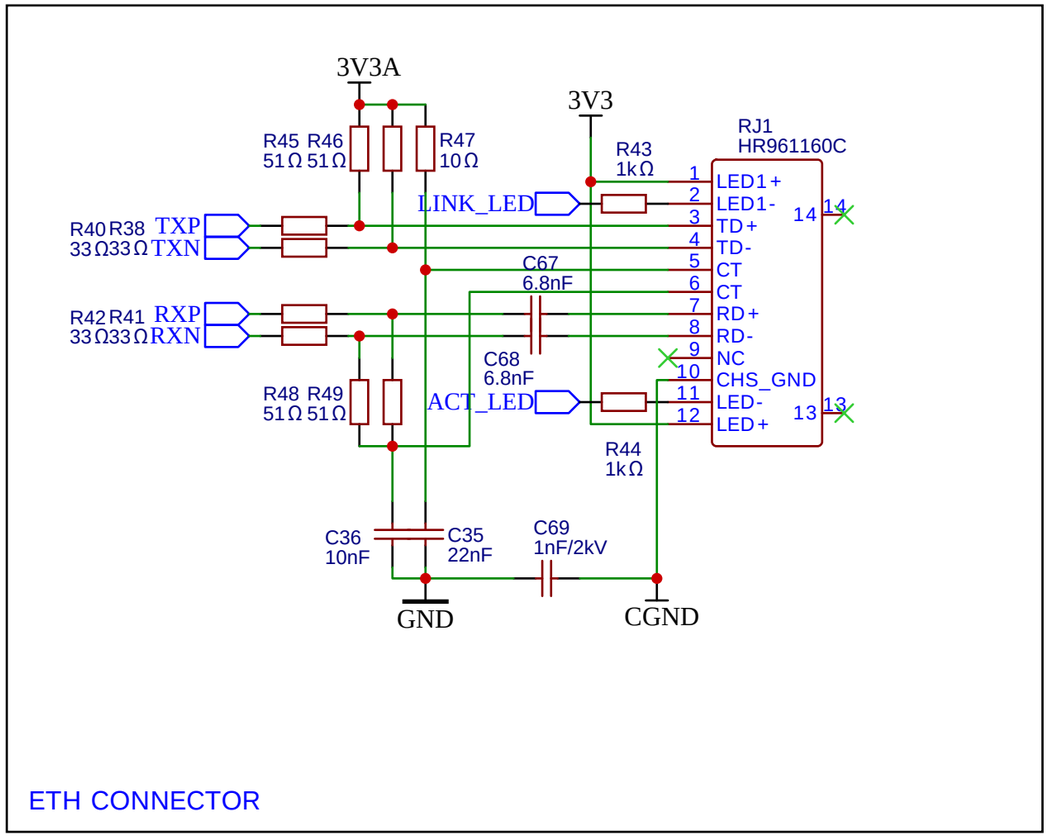

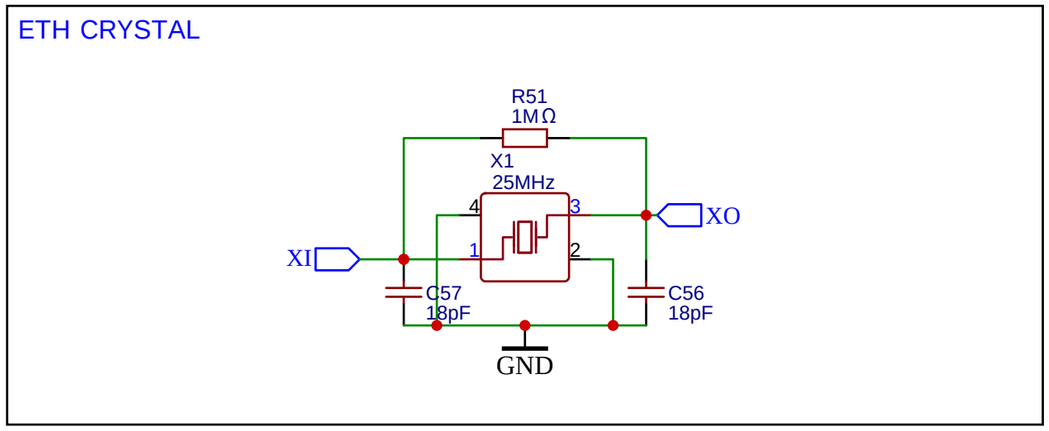

TITLE: Louder Esparagus		REV: G1
EasyEDA	Company: Sooncotta	Sheet: 3/3
	Date: 2024-02-12 Drawn By: andriy@sonocotta.com	