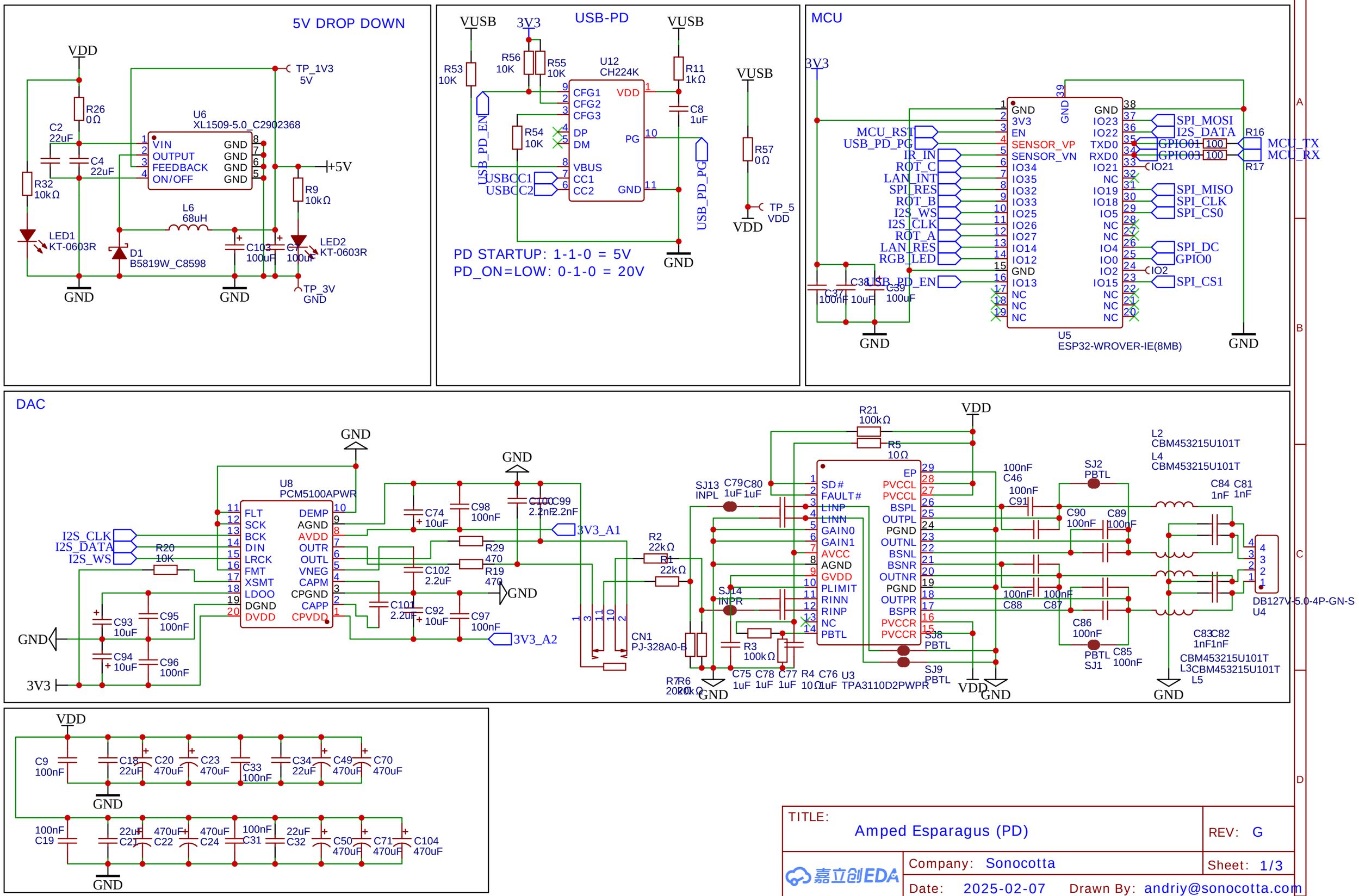

TITLE: Amped Esparagus (PD)	REV: G
Company: Sonocotta	Sheet: 1/3
Date: 2025-02-07	Drawn By: andriy@sonocotta.com

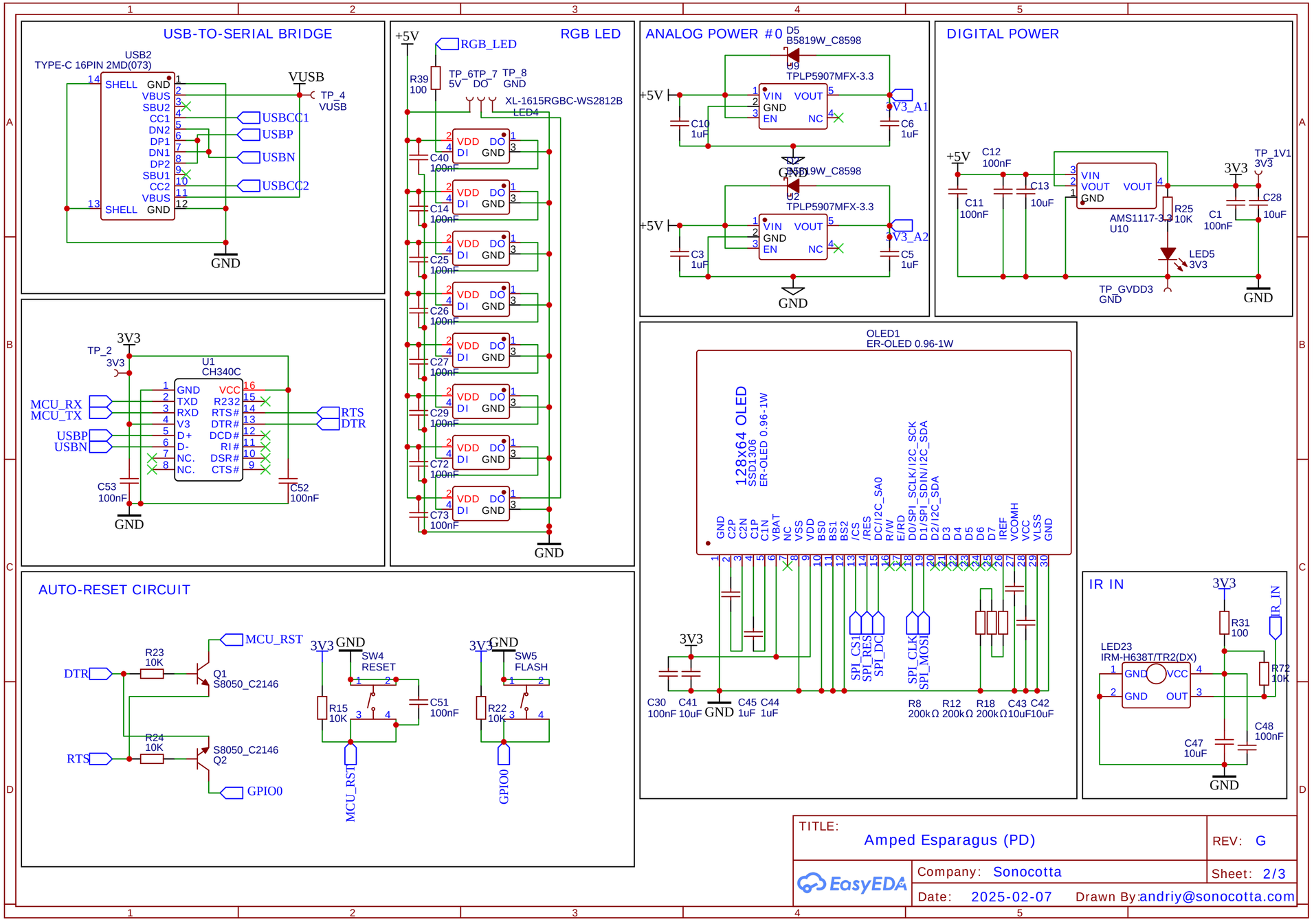
USB-TO-SERIAL BRIDGE
USB2
TYPE-C 16PIN 2MD(073)
VUSB
TP_4
VUSB
USBCC1
USBP
USBN
USBCC2
GND
RGB LED
+5V
RGB_LED
R39
100
TP_6TP_7 TP_8
5V DO GND
XL-1615RGBC-WS2812B
LED4
VDD DO
DI GND
C40 100nF
C14 100nF
C25 100nF
C26 100nF
C27 100nF
C29 100nF
C72 100nF
C73 100nF
ANALOG POWER #0
D5
B5819W_C8598
U9
TPLP5907MFX-3.3
VIN VOUT
GND
EN NC
C10 1uF
V3_A1
C6 1uF
D2
B5819W_C8598
U2
TPLP5907MFX-3.3
C3 1uF
V3_A2
C5 1uF
DIGITAL POWER
C12 100nF
C11 100nF
C13 10uF
VIN
VOUT VOUT
GND
AMS1117-3.3
U10
R25 10K
LED5
3V3
TP_1V1
3V3
C28 10uF
C1 100nF
TP_GVDD3
GND
3V3
TP_2
U1
CH340C
MCU_RX
MCU_TX
USBP
USBN
GND TXD RXD V3 D+ D- NC. NC.
VCC R232 RTS# DTR# DCD# RI# DSR# CTS#
RTS
DTR
C53 100nF
C52 100nF
OLED1
ER-OLED 0.96-1W
128x64 OLED
SSD1306
ER-OLED 0.96-1W
GND C2P C2N C1P C1N VBAT NC VSS VDD BS0 BS1 BS2 /CS /RES DC/I2C_SA0 R/W E/RD D0/SPI_SCLK/I2C_SCK D1/SPI_SDIN/I2C_SDA D2/I2C_SDA D3 D4 D5 D6 D7 IREF VCOMH VCC VLSS GND
SPI_CS1
SPI_RES
SPI_DC
SPI_CLK
SPI_MOSI
C30 100nF
C41 10uF
C45 1uF
C44 1uF
R8 200kΩ
R12 200kΩ
R18 200kΩ
C43 10uF
C42 10uF
AUTO-RESET CIRCUIT
MCU_RST
DTR
R23 10K
Q1
S8050_C2146
RTS
R24 10K
S8050_C2146
Q2
GPIO0
SW4
RESET
R15 10K
C51 100nF
SW5
FLASH
R22 10K
IR IN
LED23
IRM-H638T/TR2(DX)
GND VCC
GND OUT
R31 100
IR_IN
R72 10K
C47 10uF
C48 100nF
ROT_A
ROT_B
ROT_C
R_B
R_A
R_BTN
R65 10K
U11
ED08905M-FE15C7.0-C10-2053
R52 10K
R50 10K
C15 100nF
C16 100nF
C17 100nF
Rotary encoder
TITLE:
Amped Esparagus (PD)
REV: G
Company: Sonocotta
Sheet: 2/3
Date: 2025-02-07
Drawn By:andriy@sonocotta.com
EasyEDA

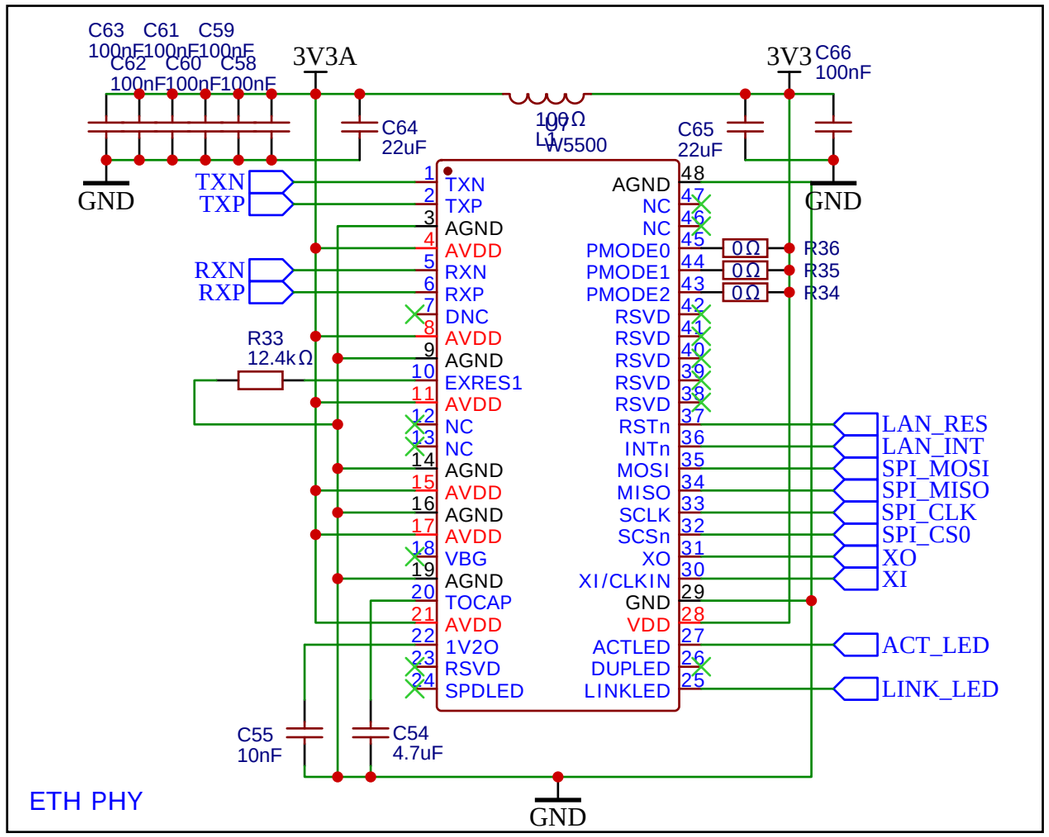

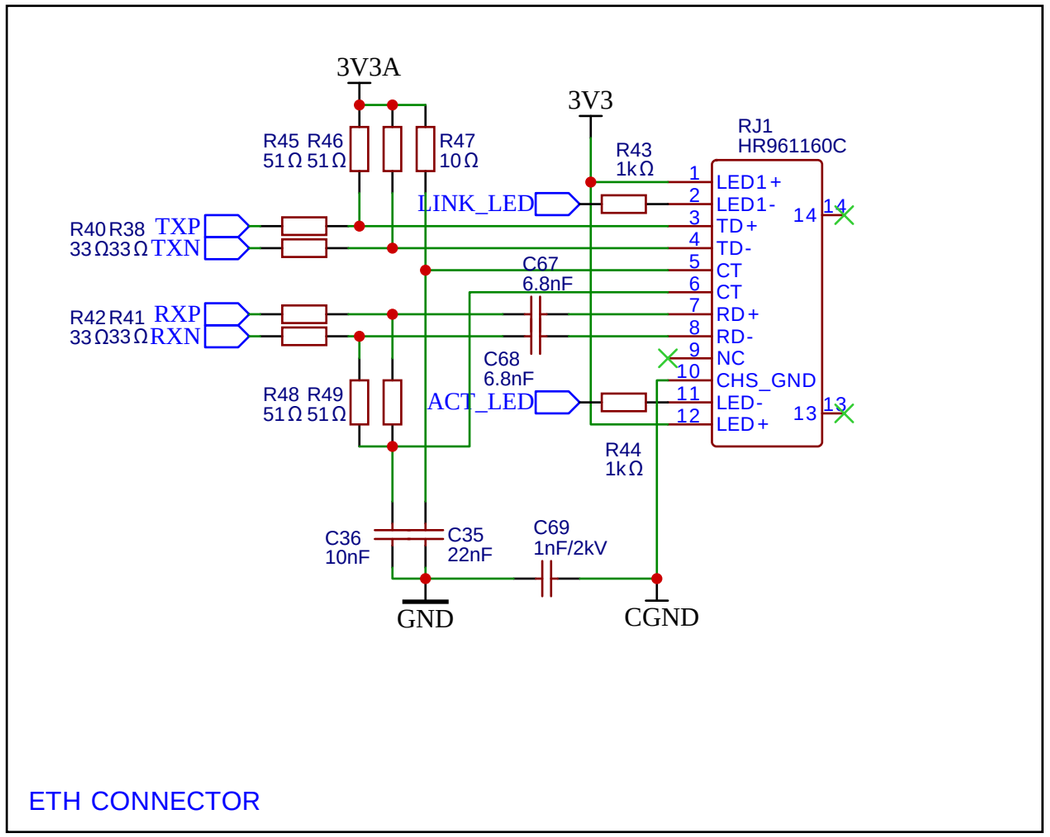

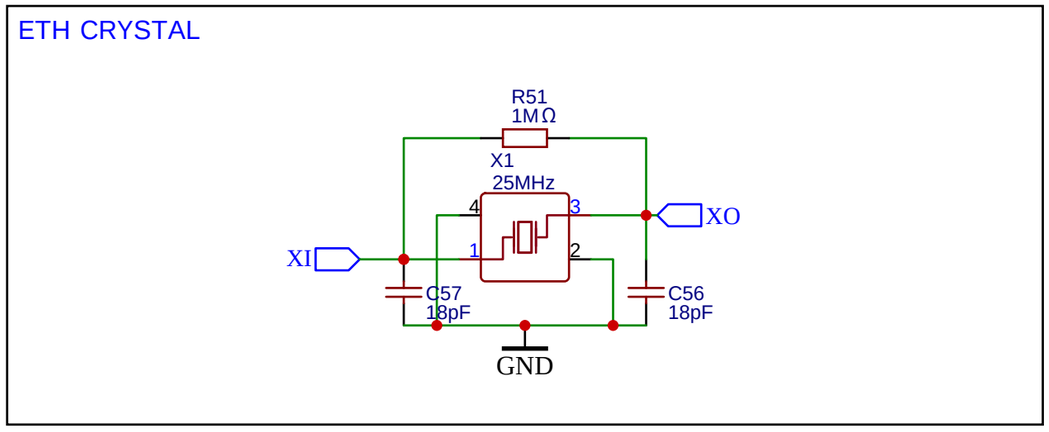

TITLE: Amped Esparagus (PD)		REV: G
EasyEDA	Company: Sooncotta	Sheet: 3/3
	Date: 2025-02-07 Drawn By: andriy@sonocotta.com	