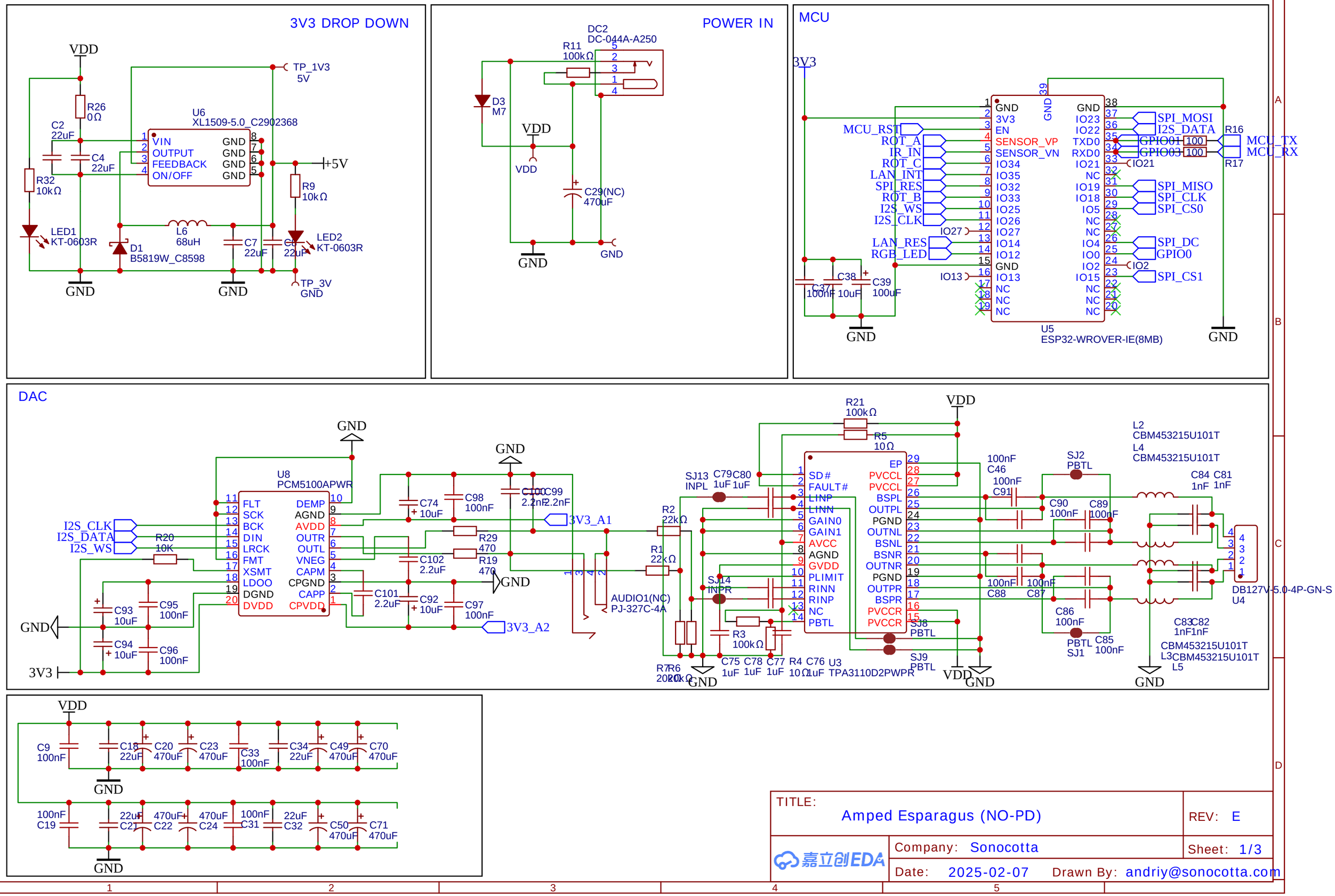

TITLE: Amped Esparagus (NO-PD)	REV: E
Company: Sonocotta	Sheet: 1/3
Date: 2025-02-07	Drawn By: andriy@sonocotta.com

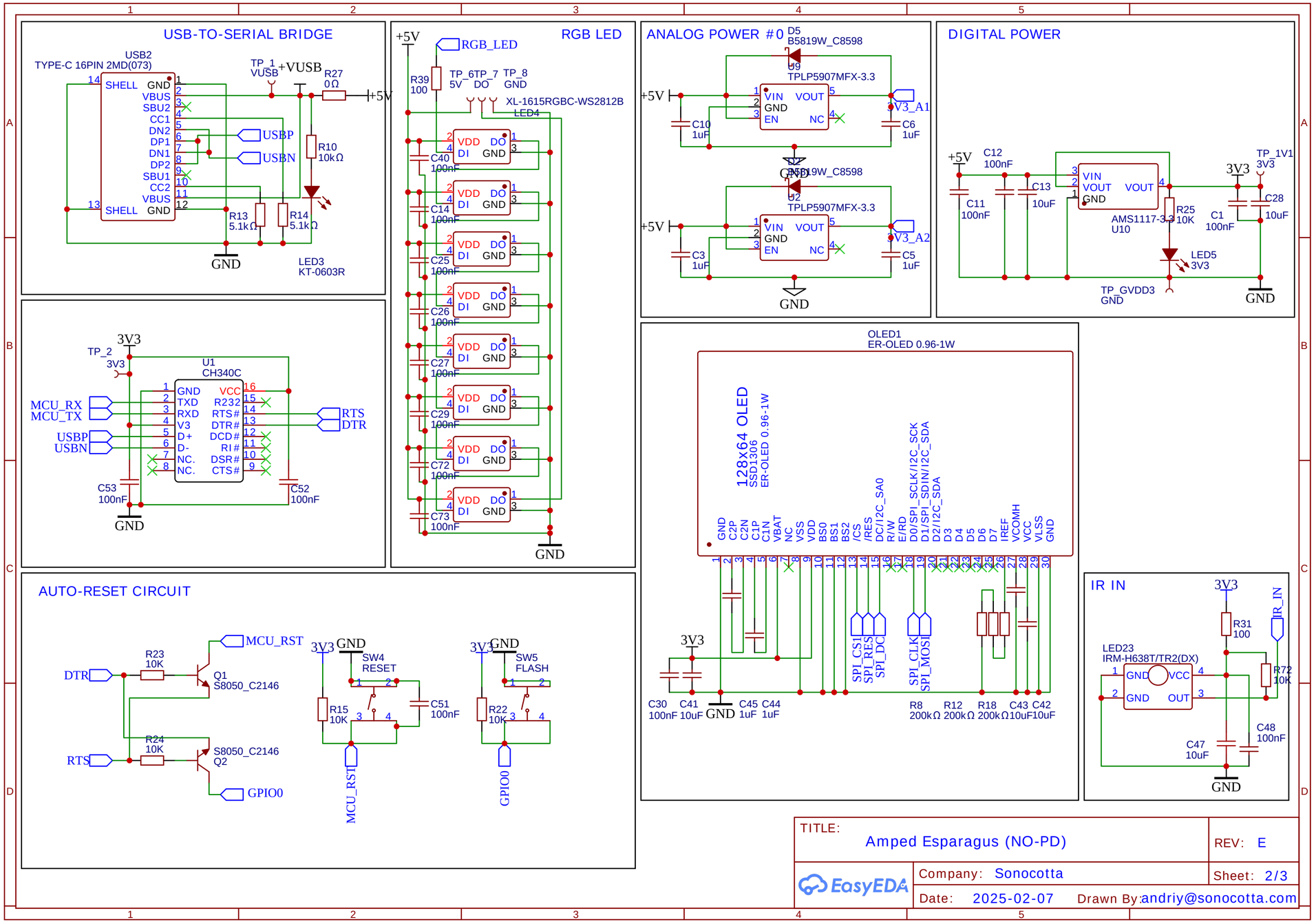
USB-TO-SERIAL BRIDGE
USB2
TYPE-C 16PIN 2MD(073)
TP_1
VUSB
+VUSB
R27
0Ω
+5V
USBP
USBN
R10
10kΩ
R13
5.1kΩ
R14
5.1kΩ
GND
LED3
KT-0603R
RGB LED
RGB_LED
R39
100
TP_6TP_7
5V DO
TP_8
GND
XL-1615RGBC-WS2812B
LED4
C40
100nF
C14
100nF
C25
100nF
C26
100nF
C27
100nF
C29
100nF
C72
100nF
C73
100nF
ANALOG POWER #0
D5
B5819W_C8598
U9
TPLP5907MFX-3.3
VIN
GND
EN
VOUT
NC
C10
1uF
C6
1uF
3V3_A1
D2
B5819W_C8598
U2
TPLP5907MFX-3.3
C3
1uF
C5
1uF
3V3_A2
DIGITAL POWER
C12
100nF
C11
100nF
C13
10uF
VIN
VOUT
GND
AMS1117-3.3
U10
R25
10K
LED5
3V3
C1
100nF
C28
10uF
TP_1V1
3V3
TP_GVDD3
GND
Rotary encoder
R28
R29
R30
R31
ROT_A
ROT_B
ROT_C
R_B
R_A
R_BTN
U11
ED08905M-FE15C7.0-C10-2053
R65
10K
R52
10K
R50
10K
C15
100nF
C16
100nF
C17
100nF
S1
S2
3V3
TP_2
U1
CH340C
GND
TXD
RXD
V3
D+
D-
NC.
VCC
R232
RTS#
DTR#
DCD#
RI#
DSR#
CTS#
MCU_RX
MCU_TX
USBP
USBN
RTS
DTR
C53
100nF
C52
100nF
OLED1
ER-OLED 0.96-1W
128x64 OLED
SSD1306
ER-OLED 0.96-1W
GND
C2P
C2N
C1P
C1N
VBAT
NC
VSS
VDD
BS0
BS1
BS2
/CS
/RES
DC/I2C_SA0
R/W
E/RD
D0/SPI_SCLK/I2C_SCK
D1/SPI_SDIN/I2C_SDA
D2/I2C_SDA
D3
D4
D5
D6
D7
IREF
VCOMH
VCC
VLSS
GND
SPI_CS1
SPI_RES
SPI_DC
SPI_CLK
SPI_MOSI
C30
100nF
C41
10uF
C45
1uF
C44
1uF
R8
200kΩ
R12
200kΩ
R18
200kΩ
C43
10uF
C42
10uF
IR IN
3V3
R31
100
IR_IN
LED23
IRM-H638T/TR2(DX)
GND
VCC
OUT
R72
10K
C47
10uF
C48
100nF
AUTO-RESET CIRCUIT
MCU_RST
DTR
R23
10K
Q1
S8050_C2146
RTS
R24
10K
S8050_C2146
Q2
GPIO0
SW4
RESET
R15
10K
C51
100nF
SW5
FLASH
R22
10K
TITLE:
Amped Esparagus (NO-PD)
REV: E
Company: Sonocotta
Sheet: 2/3
Date: 2025-02-07
Drawn By: andriy@sonocotta.com
EasyEDA

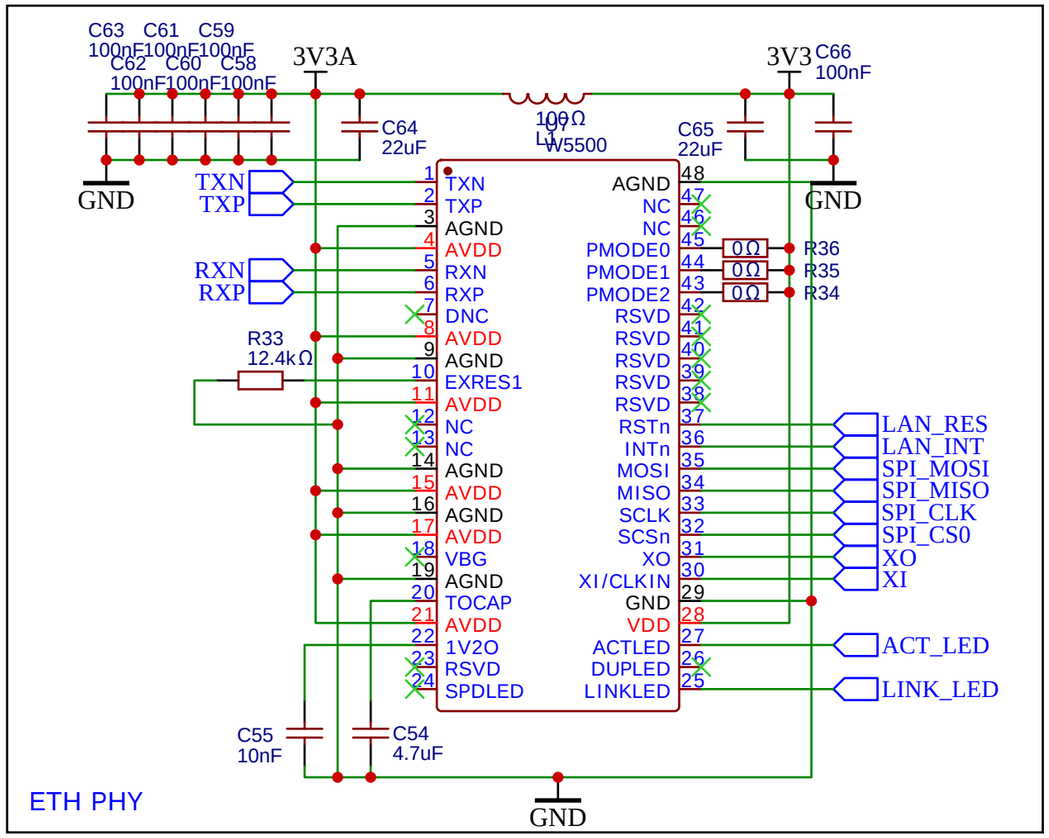

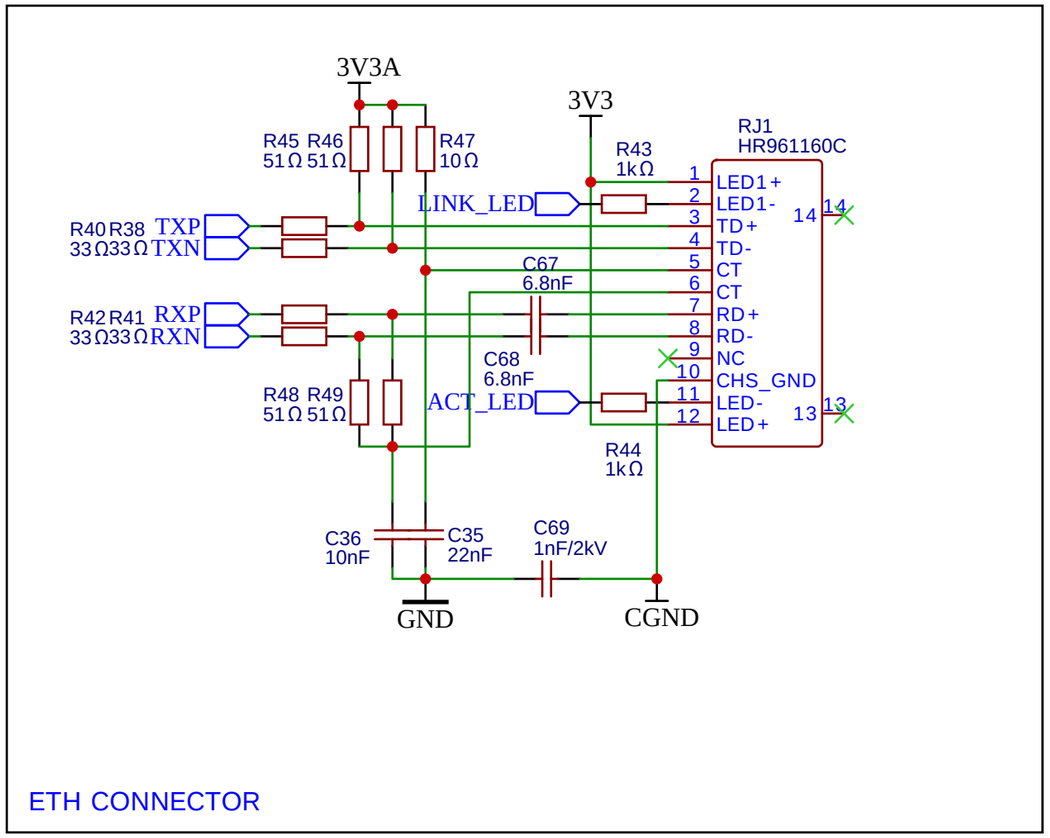

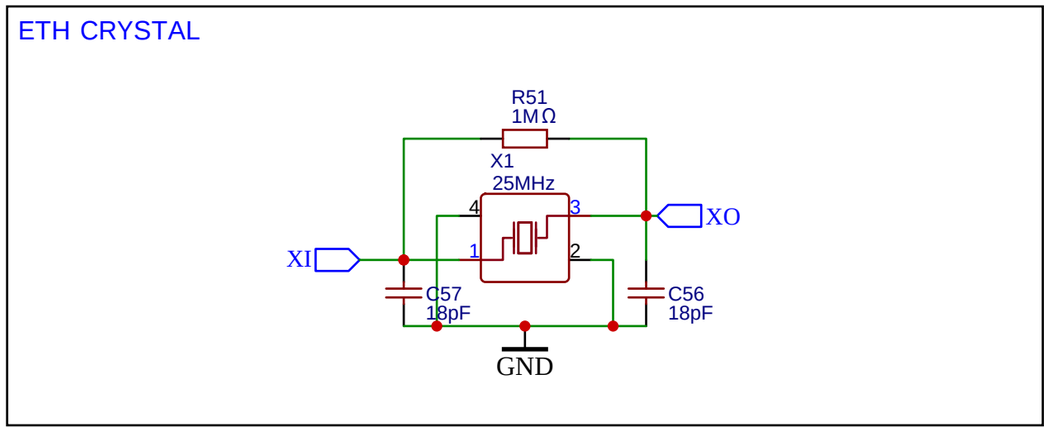

TITLE: Amped Esparagus (NO-PD)		REV: E
EasyEDA	Company: Sooncotta	Sheet: 3/3
	Date: 2025-02-07 Drawn By: andriy@sonocotta.com	