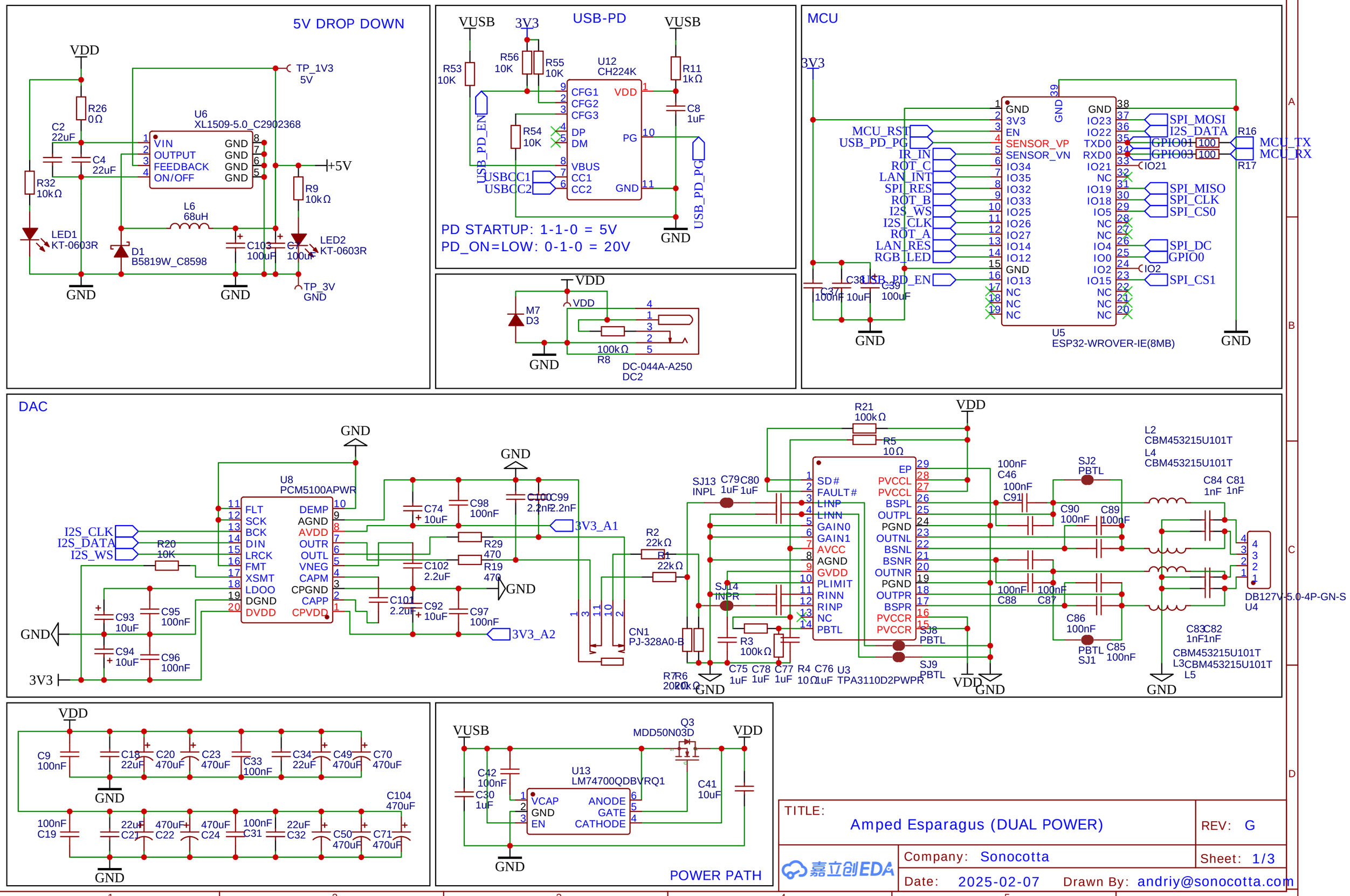

TITLE: Amped Esparagus (DUAL POWER)	REV: G
Company: Sonocotta	Sheet: 1/3
Date: 2025-02-07	Drawn By: andriy@sonocotta.com

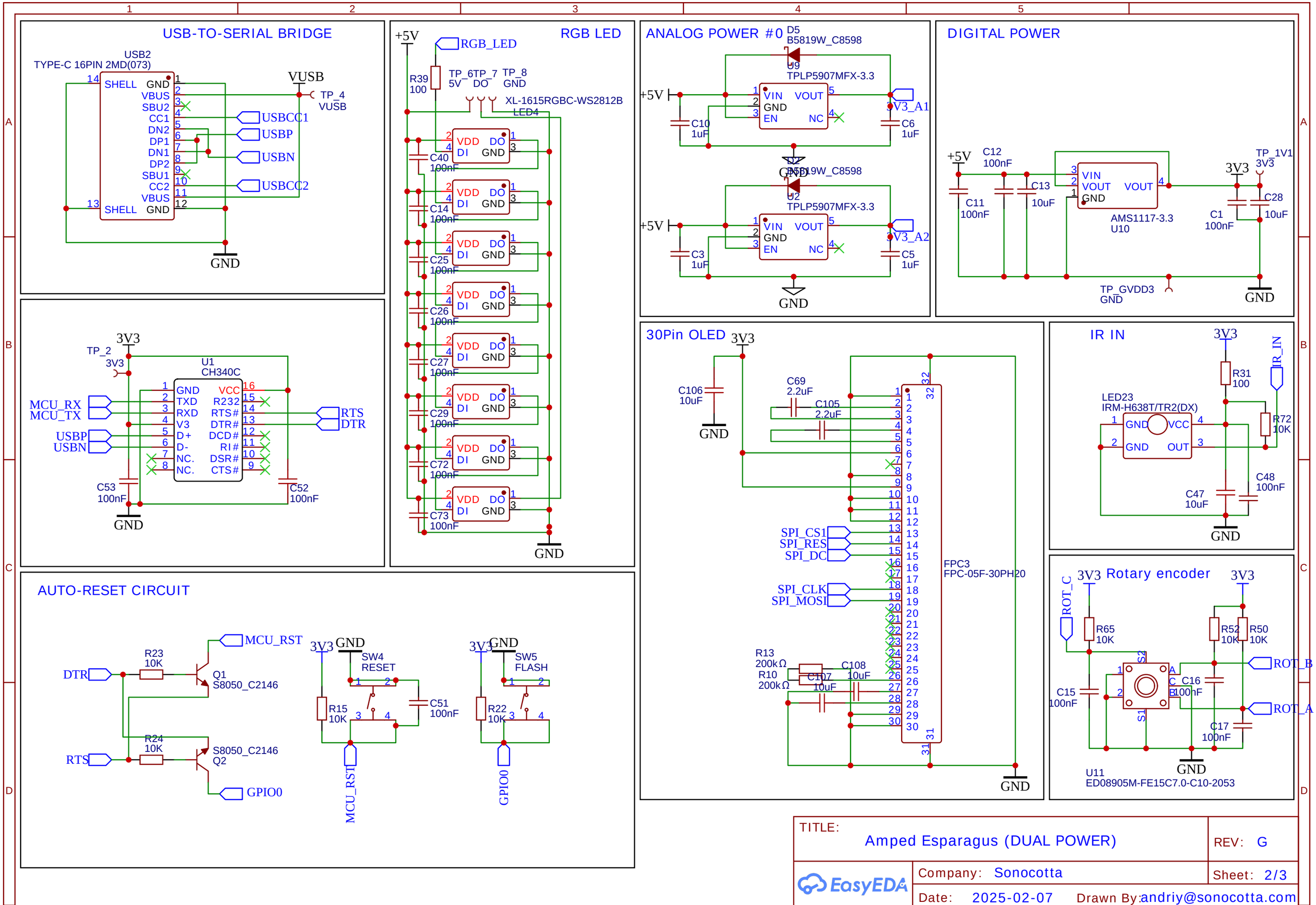

TITLE: Amped Esparagus (DUAL POWER)	REV: G
EasyEDA	Company: Sonocotta
	Sheet: 2/3
	Date: 2025-02-07
	Drawn By: andriy@sonocotta.com

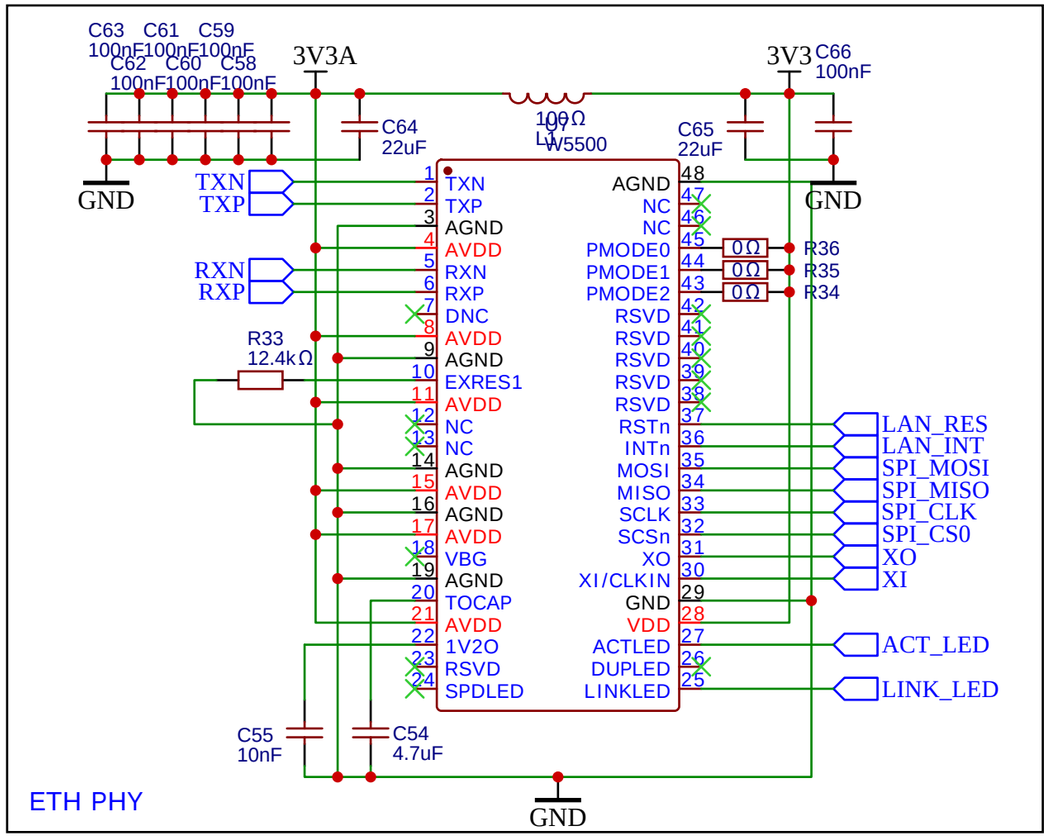

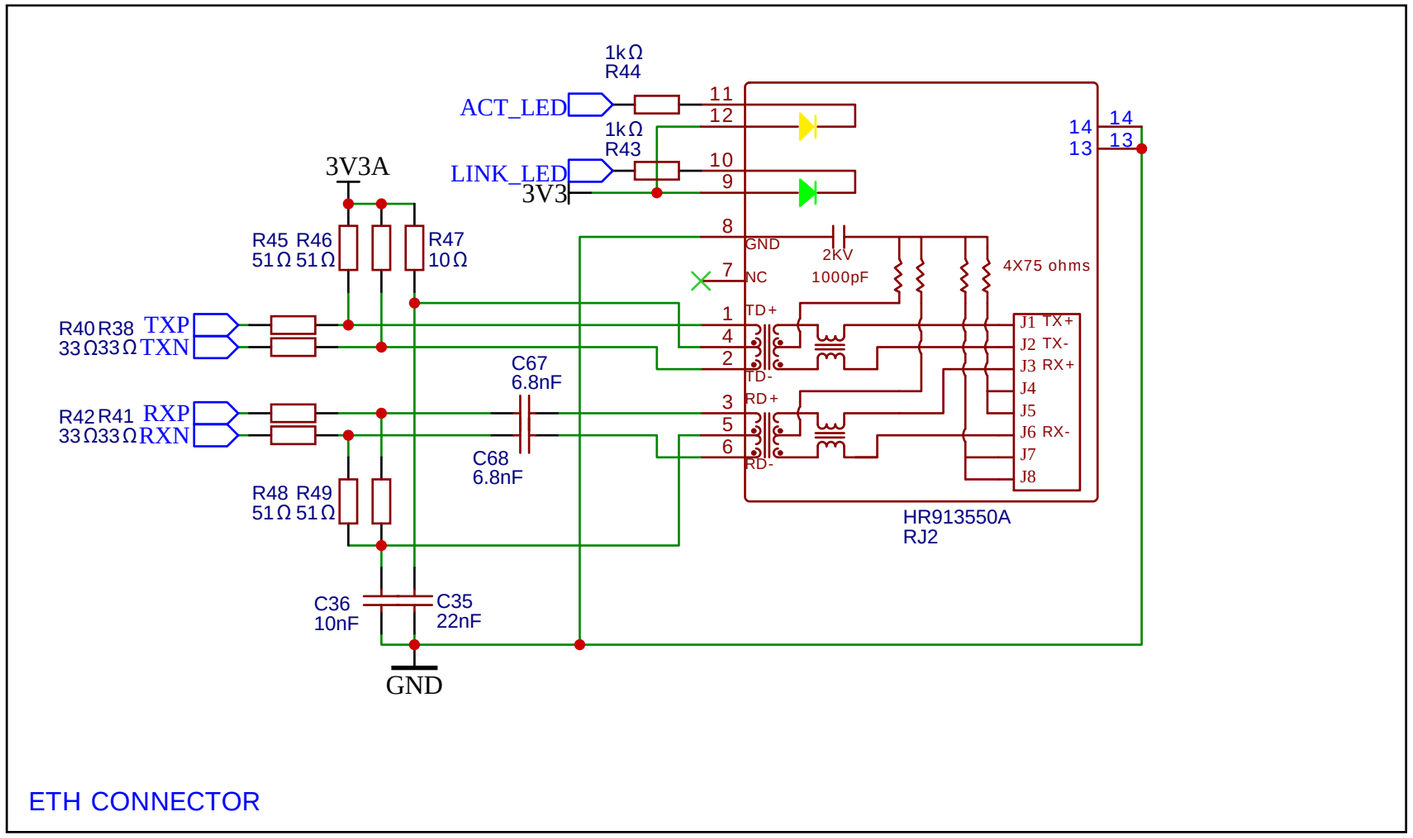

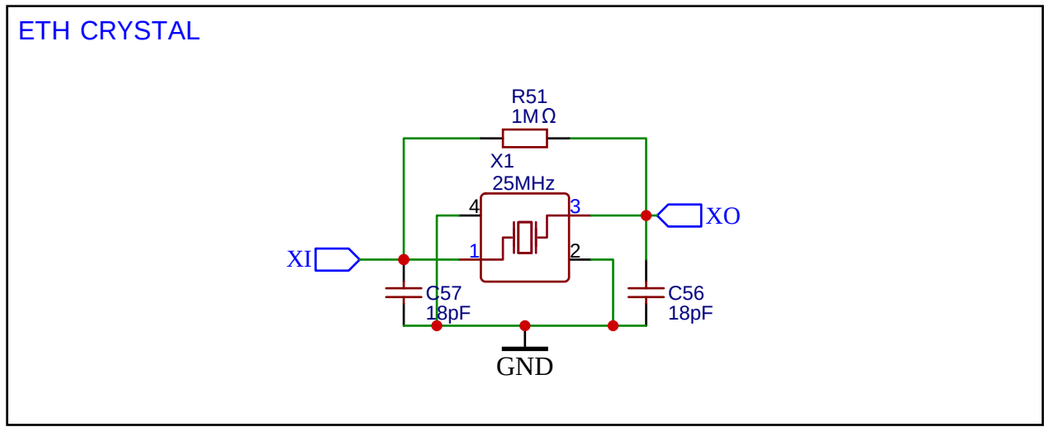

TITLE: Amped Esparagus (DUAL POWER)		REV: G
EasyEDA	Company: Sooncotta	Sheet: 3/3
	Date: 2025-02-07 Drawn By: andriy@sonocotta.com	