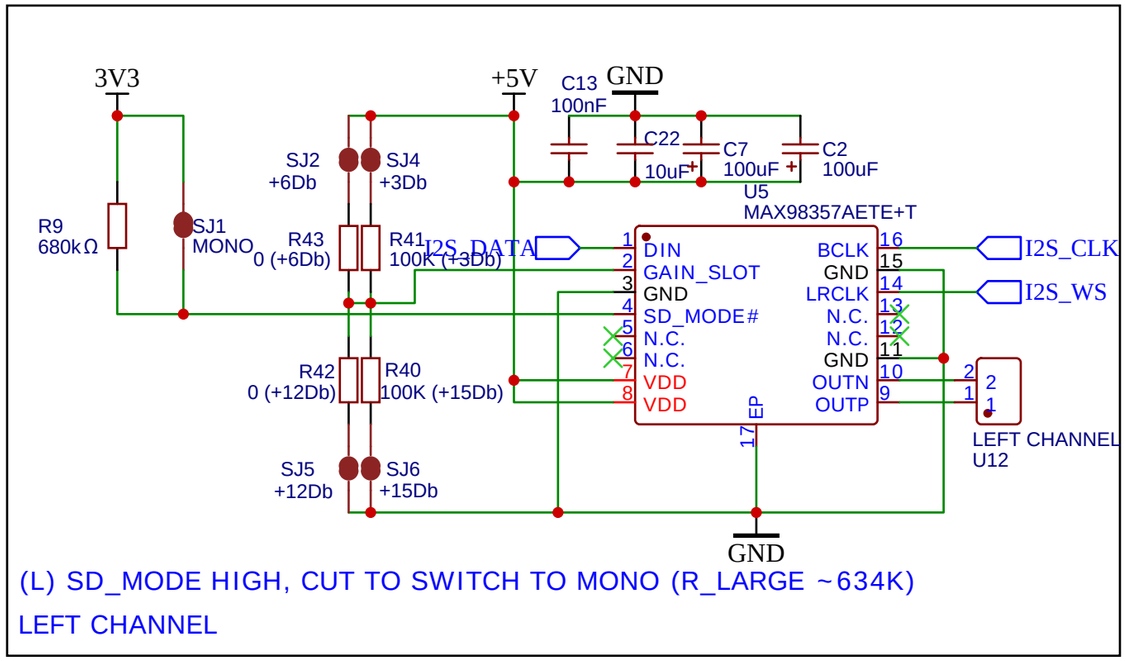

(L) SD_MODE HIGH, CUT TO SWITCH TO MONO (R_LARGE ~634K)

LEFT CHANNEL

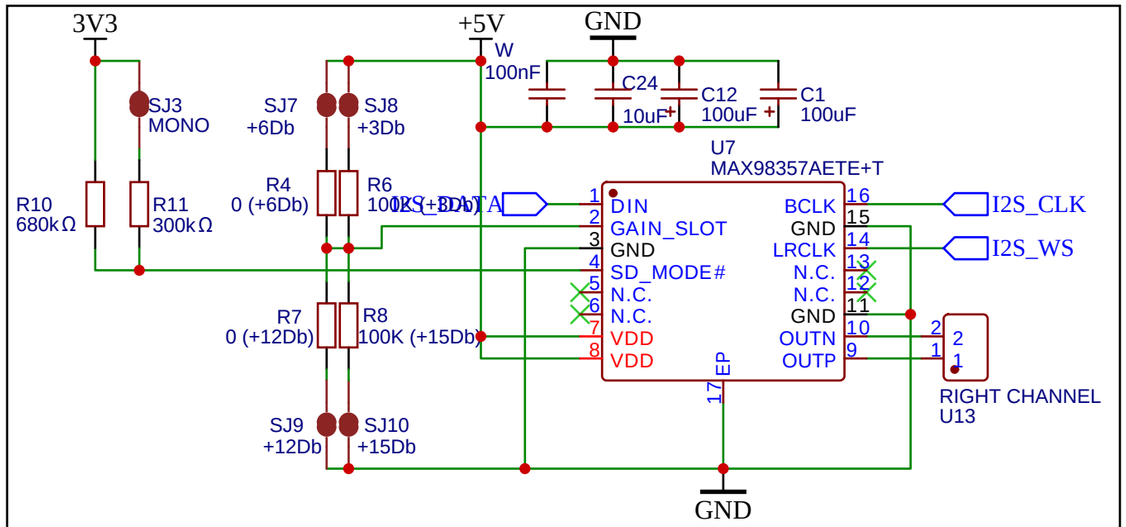

(R) SD_MODE HIGH (R_SMALL ~210K)

CUT TO SWITCH TO MONO (R_LARGE ~634K)

RIGHT CHANNEL

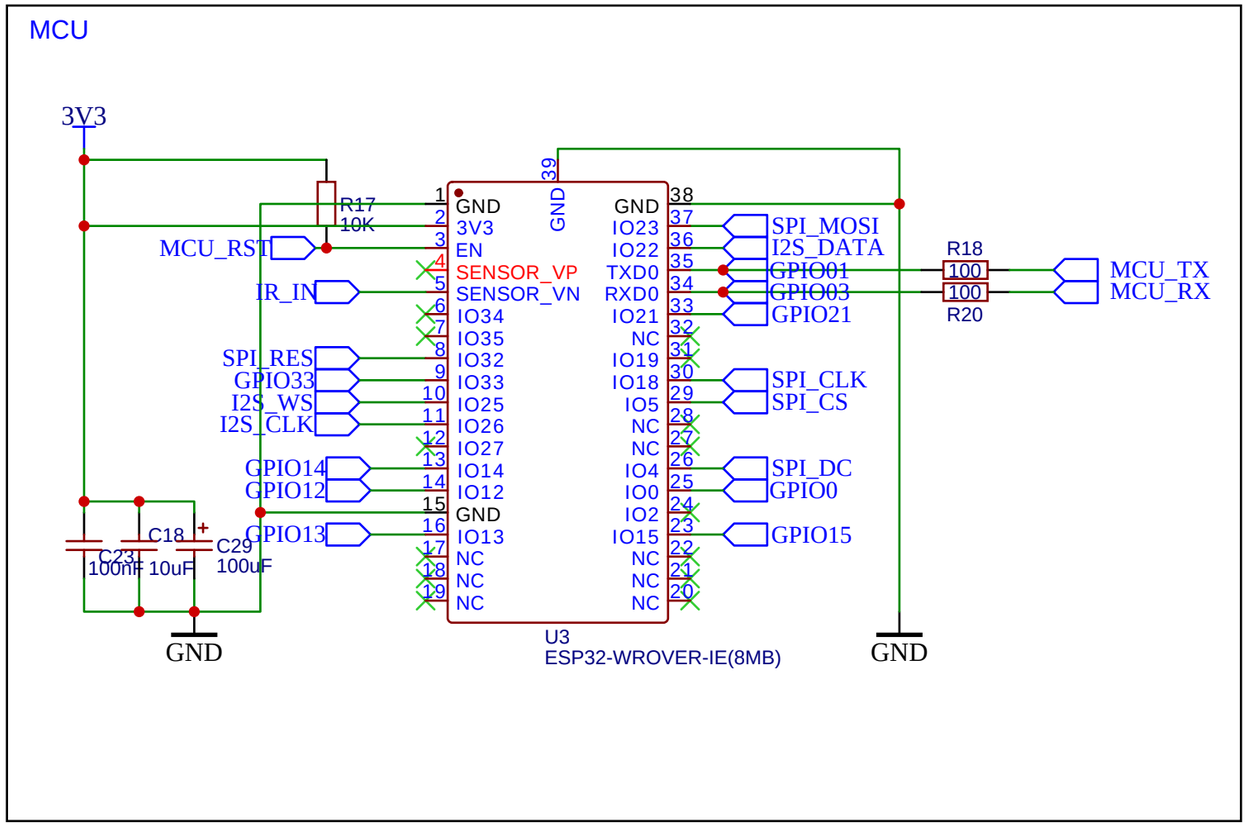

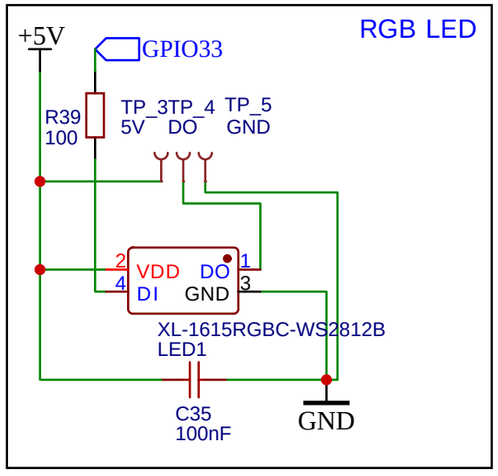

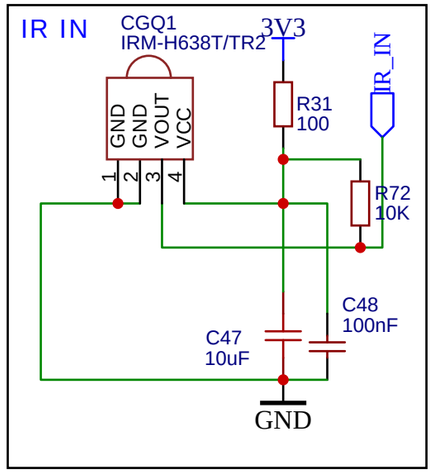

TITLE: Loud Esparagus	REV: D1
EasyEDA — Company: Sonocotta	Sheet: 1/2
Date: 2024-02-15 — Drawn By: andriy@sonocotta.com	

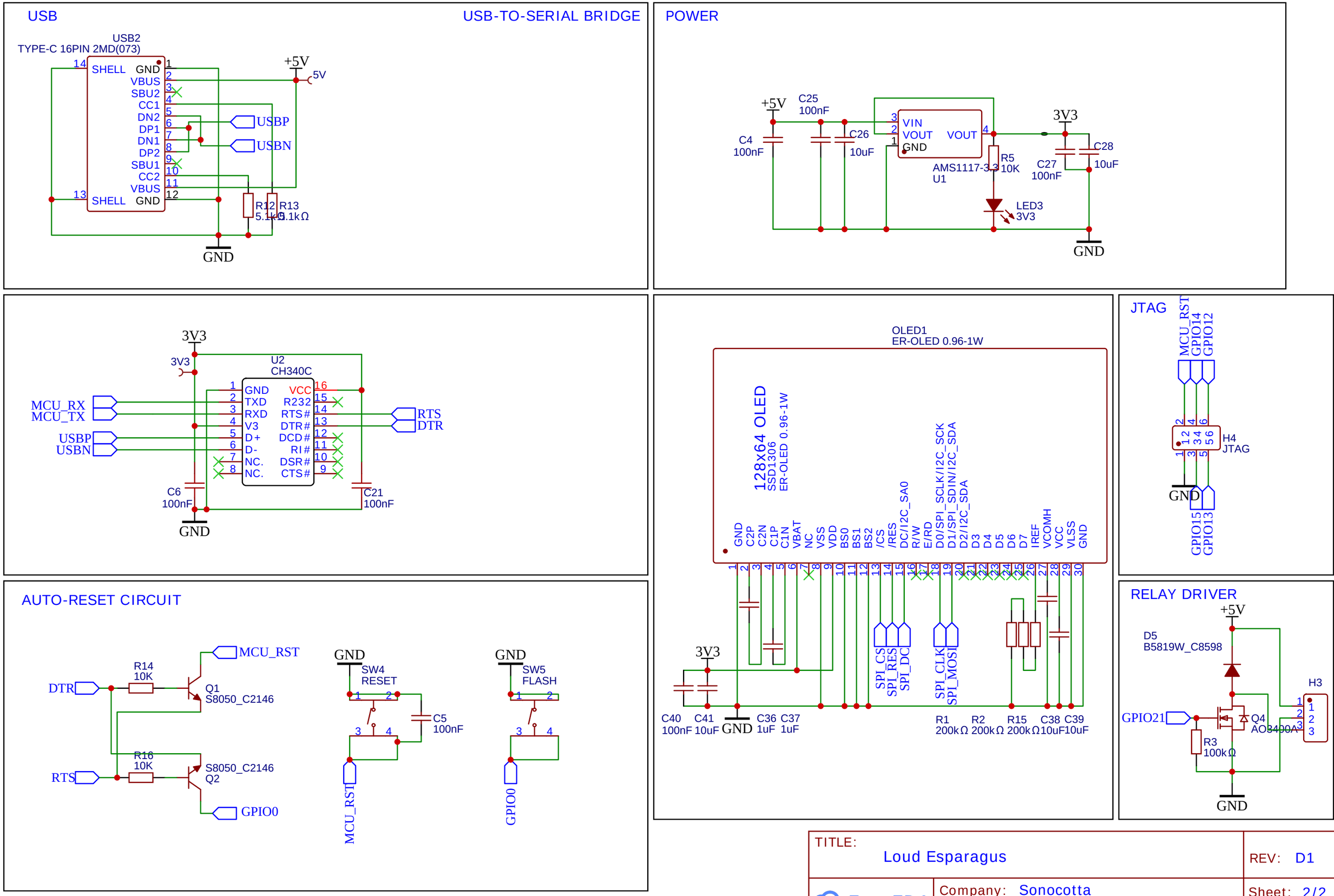

TITLE: Loud Esparagus

REV: D1

Company: Sonocotta

Sheet: 2/2

Date: 2024-02-15

Drawn By: andriy@sonocotta.com