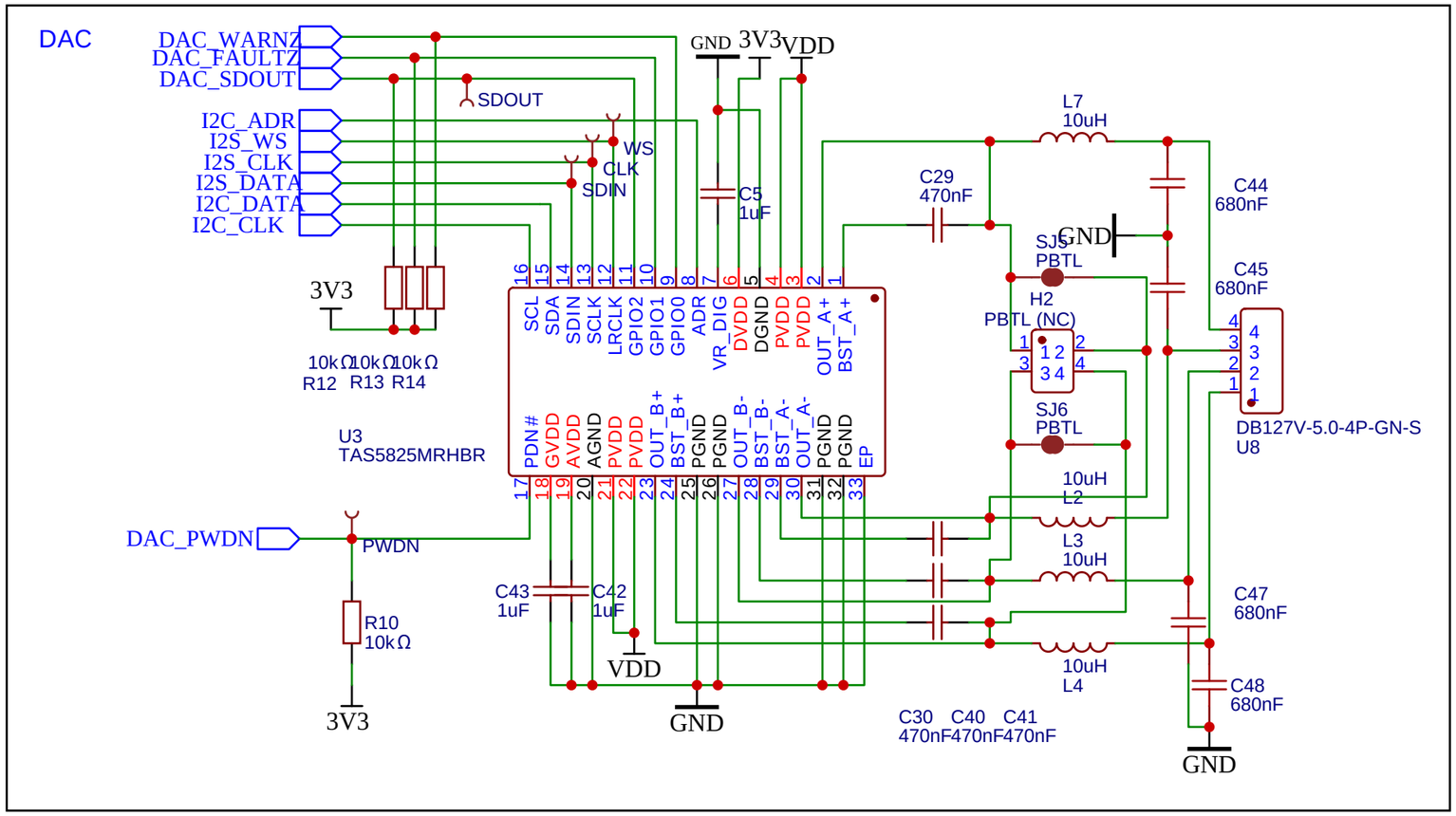

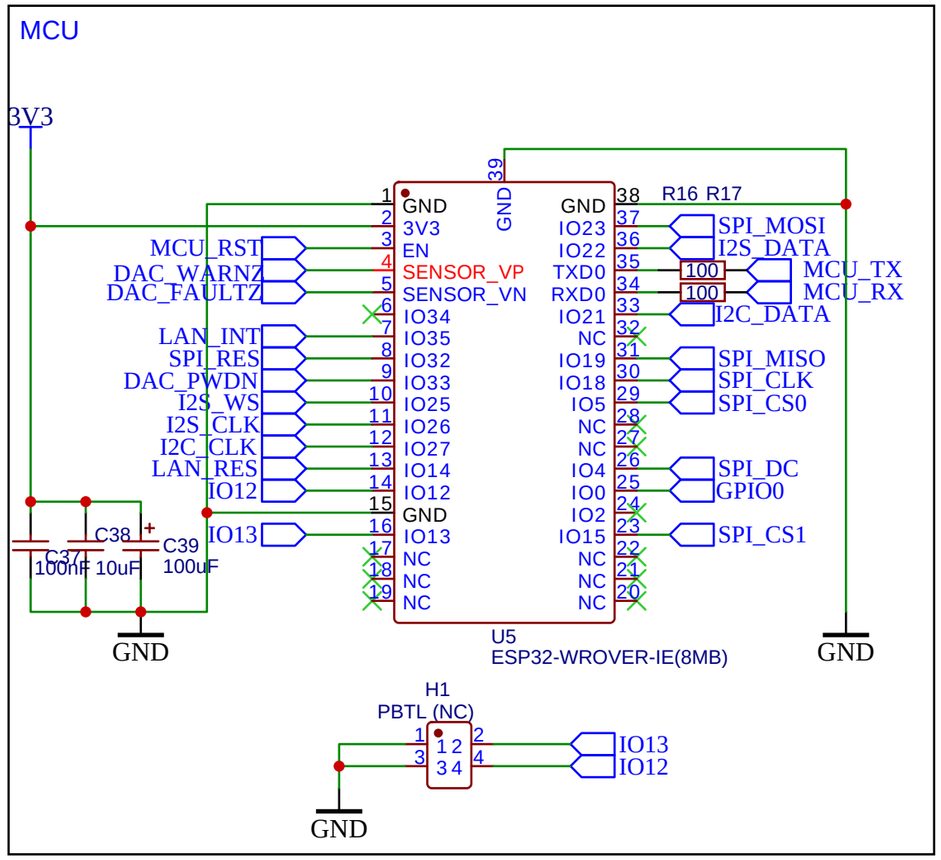

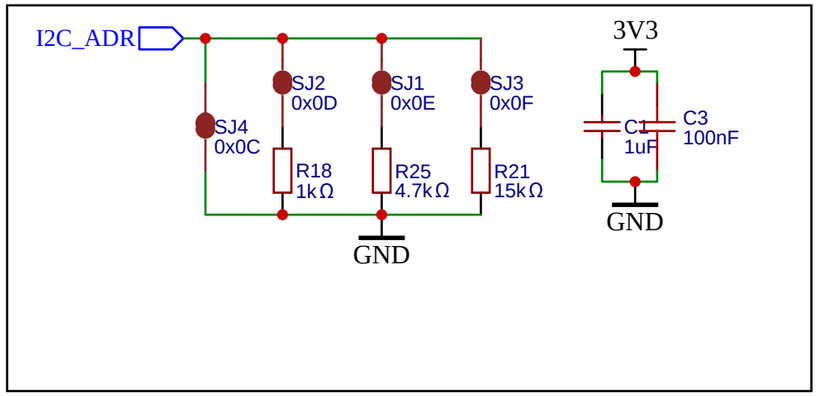

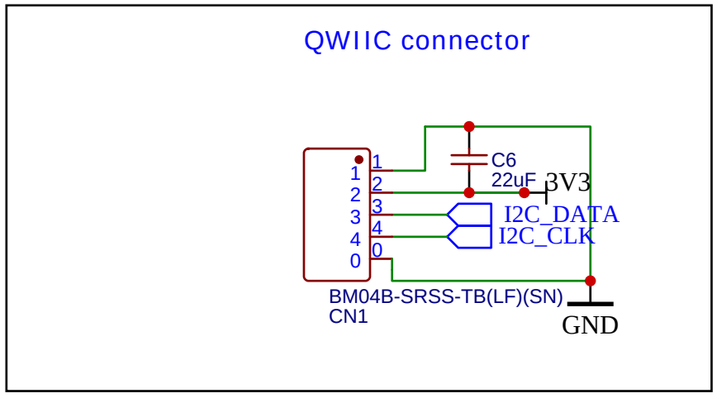

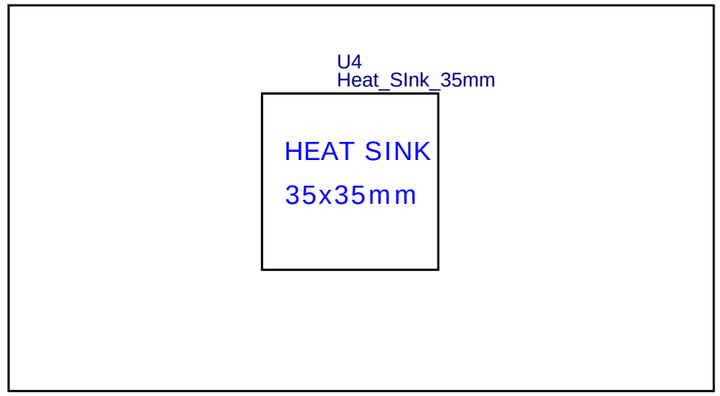

TITLE: Louder Esparagus (DUAL POWER)		REV: J1
嘉立创EDA	Company: Sonocotta	Sheet: 1/3
	Date: 2023-04-20 Drawn By: andriy@sonocotta.com	

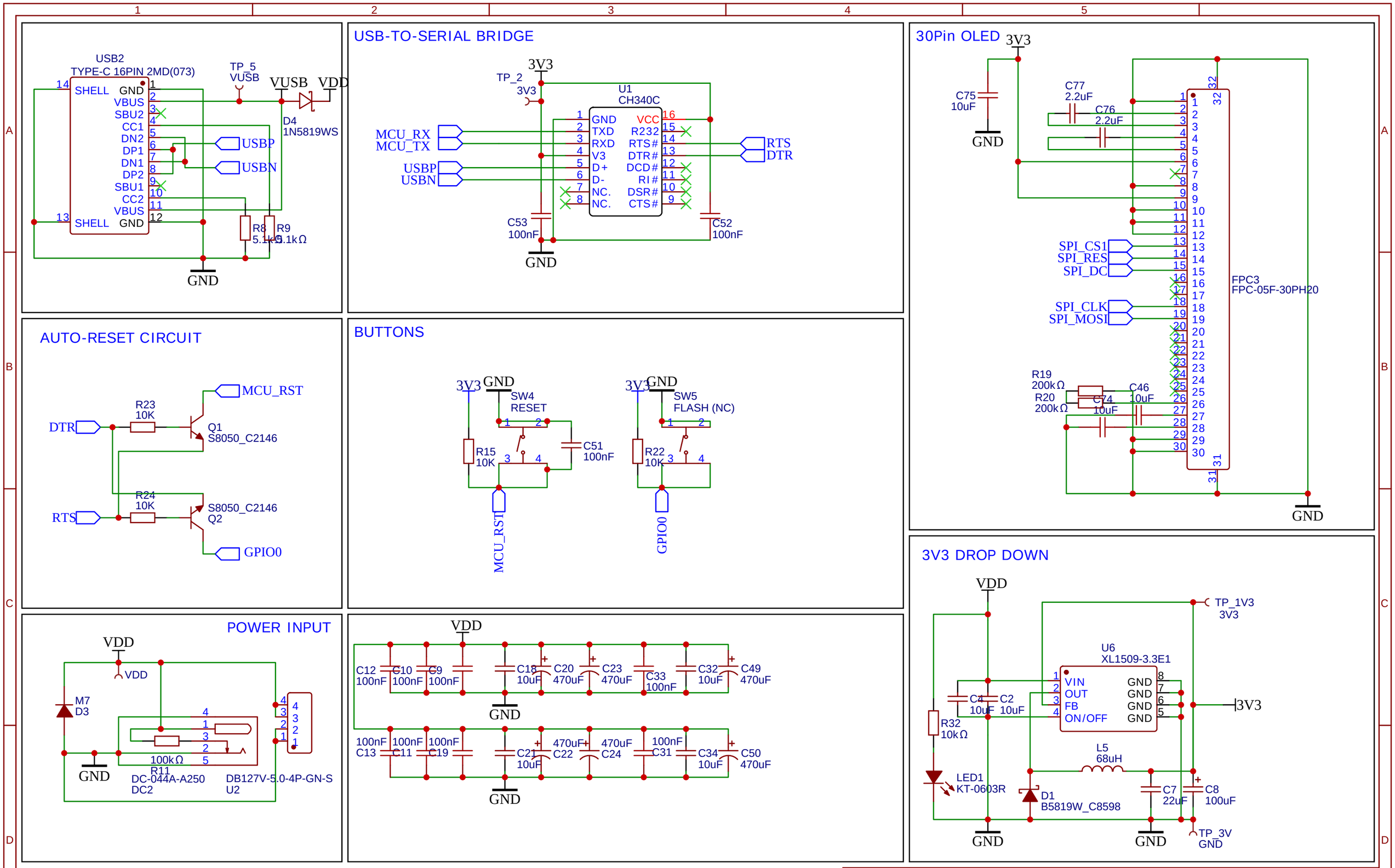

TITLE: Louder Esparagus (DUAL POWER)	REV: J1
EasyEDA Company: Sonocotta	Sheet: 2/3
Date: 2023-11-30 Drawn By: andriy@sonocotta.com	

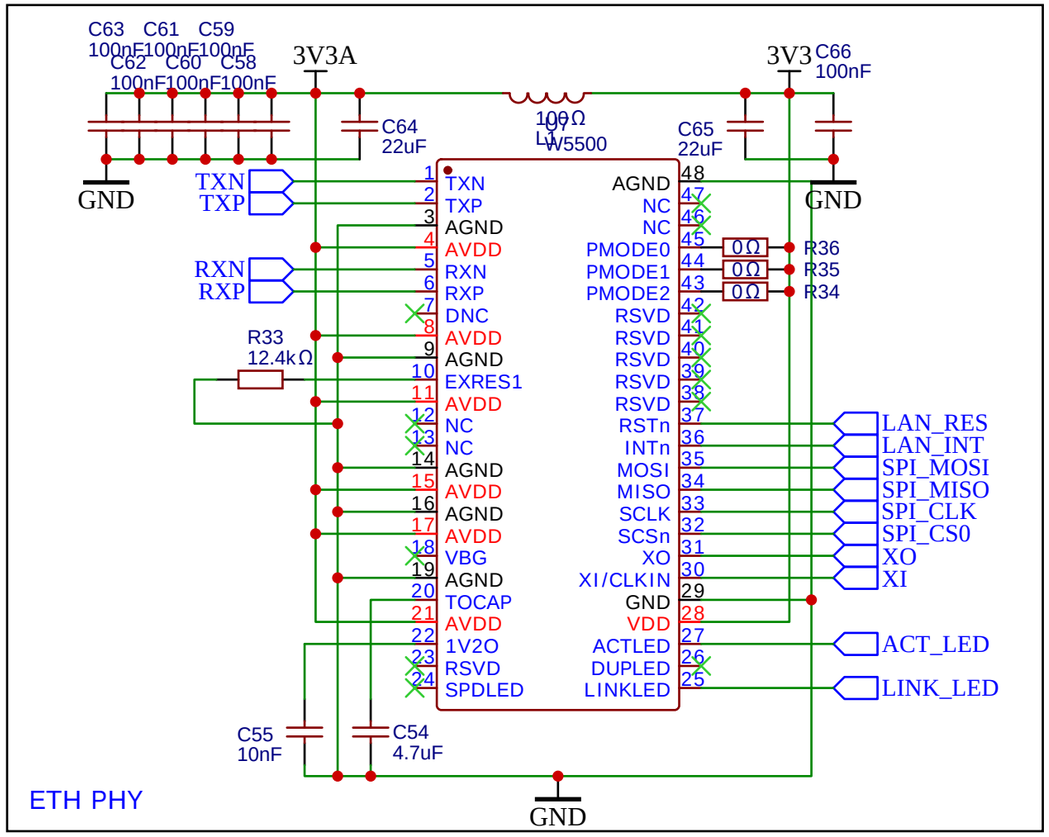

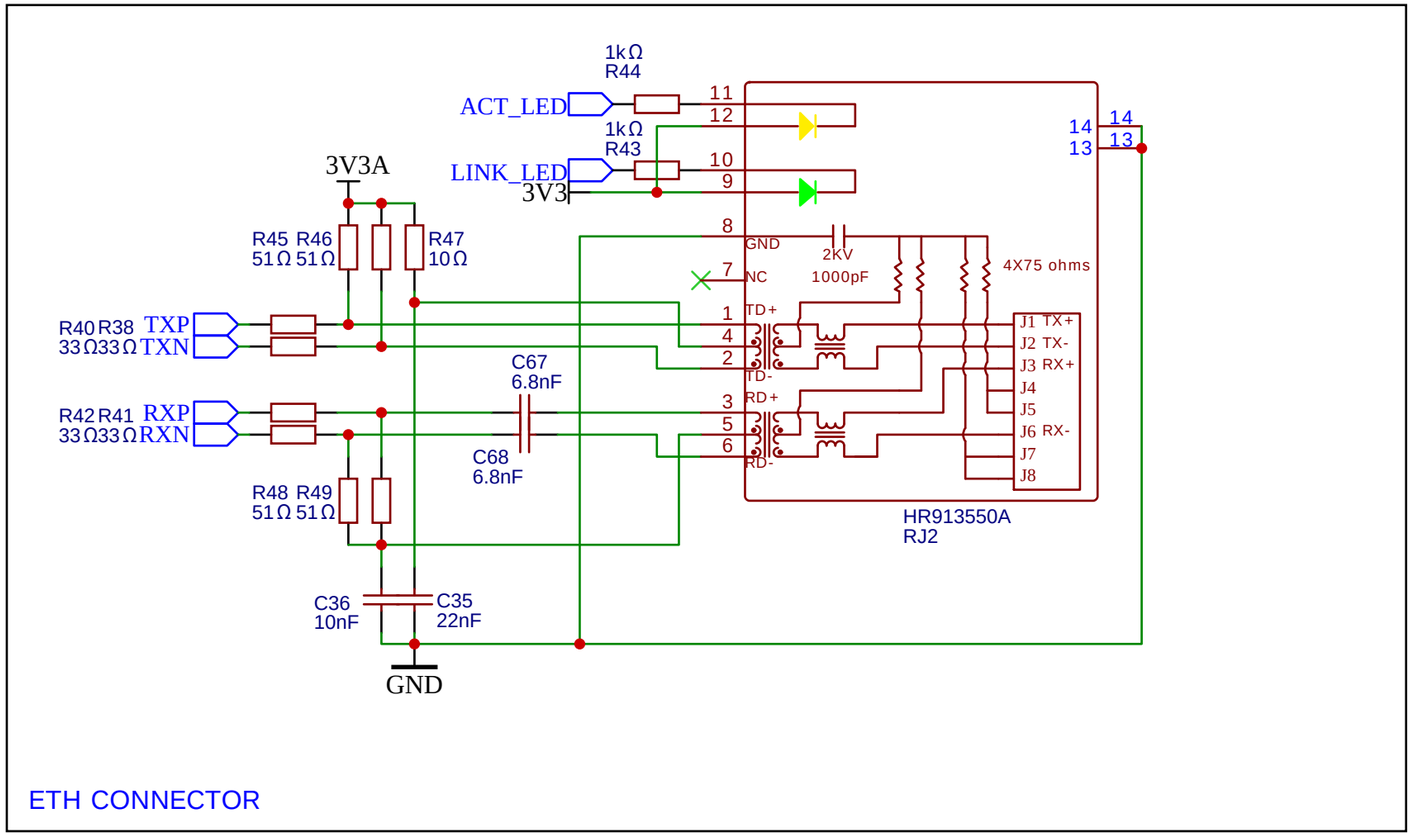

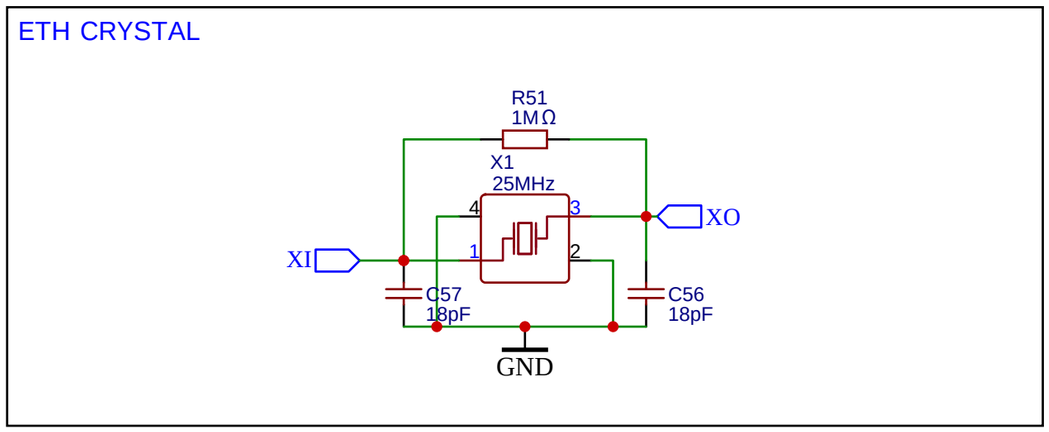

TITLE: Louder Esparagus (DUAL POWER)		REV: J1
EasyEDA	Company: Sonocotta	Sheet: 3/3
	Date: 2024-02-12 Drawn By: andriy@sonocotta.com	