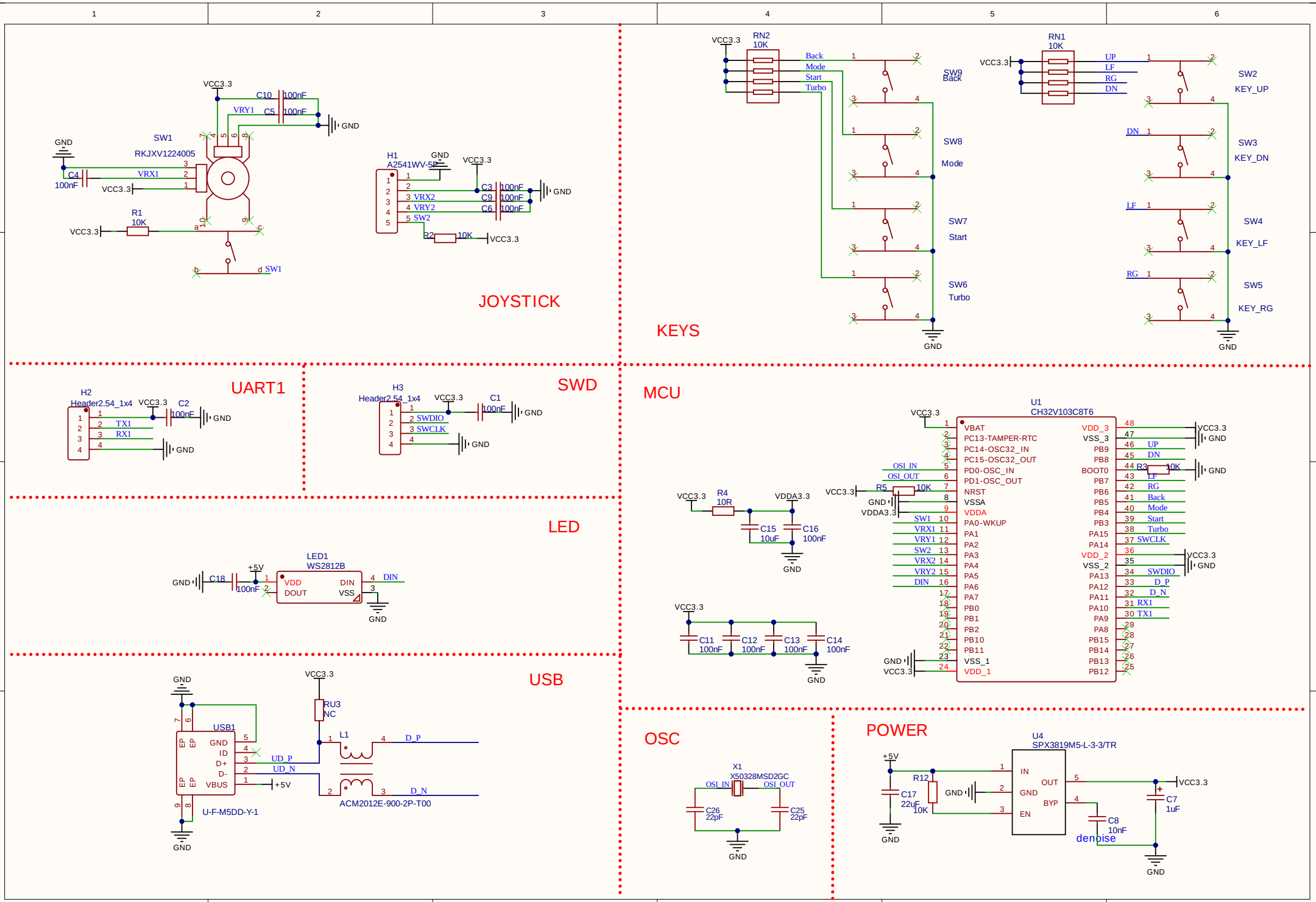
JOYSTICK
SW1
RKJXV1224005
C10 100nF
C5 100nF
VRY1
VRX1
C4 100nF
R1 10K
VCC3.3
GND
d SW1
H1
A2541WV-5P
C3 100nF
C9 100nF
C6 100nF
VRX2
VRY2
SW2
R2 10K
KEYS
RN2 10K
Back
Mode
Start
Turbo
SW9 Back
SW8 Mode
SW7 Start
SW6 Turbo
RN1 10K
UP
LF
RG
DN
SW2 KEY_UP
SW3 KEY_DN
SW4 KEY_LF
SW5 KEY_RG
UART1
H2
Header2.54_1x4
C2 100nF
TX1
RX1
SWD
H3
Header2.54_1x4
C1 100nF
SWDIO
SWCLK
LED
LED1
WS2812B
C18 100nF
+5V
VDD
DOUT
DIN
VSS
USB
USB1
U-F-M5DD-Y-1
RU3 NC
L1
ACM2012E-900-2P-T00
D_P
D_N
UD_P
UD_N
MCU
U1
CH32V103C8T6
R4 10R
VDDA3.3
C15 10uF
C16 100nF
R5 10K
R3 10K
OSI_IN
OSI_OUT
C11 100nF
C12 100nF
C13 100nF
C14 100nF
OSC
X1
X50328MSD2GC
C26 22pF
C25 22pF
POWER
U4
SPX3819M5-L-3-3/TR
R12 10K
C17 22uF
C8 10nF
C7 1uF
denoise