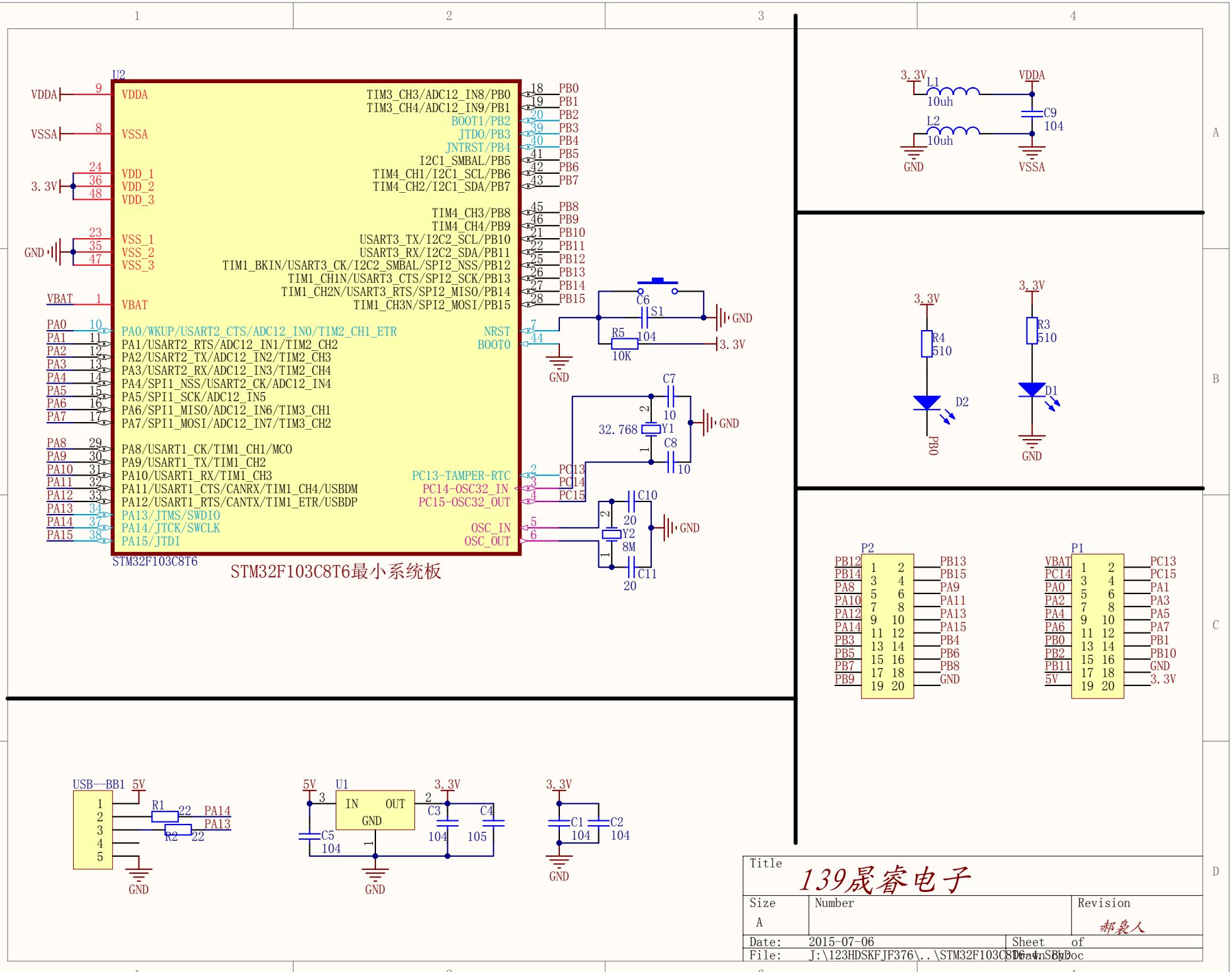
U2
STM32F103C8T6
STM32F103C8T6最小系统板
VDDA
VSSA
3.3V
GND
VBAT
PA0/WKUP/USART2_CTS/ADC12_IN0/TIM2_CH1_ETR
PA1/USART2_RTS/ADC12_IN1/TIM2_CH2
PA2/USART2_TX/ADC12_IN2/TIM2_CH3
PA3/USART2_RX/ADC12_IN3/TIM2_CH4
PA4/SPI1_NSS/USART2_CK/ADC12_IN4
PA5/SPI1_SCK/ADC12_IN5
PA6/SPI1_MISO/ADC12_IN6/TIM3_CH1
PA7/SPI1_MOSI/ADC12_IN7/TIM3_CH2
PA8/USART1_CK/TIM1_CH1/MCO
PA9/USART1_TX/TIM1_CH2
PA10/USART1_RX/TIM1_CH3
PA11/USART1_CTS/CANRX/TIM1_CH4/USBDM
PA12/USART1_RTS/CANTX/TIM1_ETR/USBDP
PA13/JTMS/SWDIO
PA14/JTCK/SWCLK
PA15/JTDI
TIM3_CH3/ADC12_IN8/PB0
TIM3_CH4/ADC12_IN9/PB1
BOOT1/PB2
JTDO/PB3
JNTRST/PB4
I2C1_SMBAL/PB5
TIM4_CH1/I2C1_SCL/PB6
TIM4_CH2/I2C1_SDA/PB7
TIM4_CH3/PB8
TIM4_CH4/PB9
USART3_TX/I2C2_SCL/PB10
USART3_RX/I2C2_SDA/PB11
TIM1_BKIN/USART3_CK/I2C2_SMBAL/SPI2_NSS/PB12
TIM1_CH1N/USART3_CTS/SPI2_SCK/PB13
TIM1_CH2N/USART3_RTS/SPI2_MISO/PB14
TIM1_CH3N/SPI2_MOSI/PB15
NRST
BOOT0
PC13-TAMPER-RTC
PC14-OSC32_IN
PC15-OSC32_OUT
OSC_IN
OSC_OUT
C6
S1
R5
104
10K
C7
10
32.768
Y1
C8
10
C10
20
Y2
8M
C11
20
L1
10uh
L2
10uh
C9
104
R4
510
D2
PB0
R3
510
D1
P2
P1
USB--BB1
R1
22
R2
22
PA14
PA13
U1
IN
OUT
C3
104
C4
105
C5
104
C1
104
C2
104
Title
139晟睿电子
Size
A
Number
Revision
郝袁人
Date: 2015-07-06
Sheet of
File: J:\123HDSKFJF376\..\STM32F103C8T6_Main.SchDoc
Drawn By: