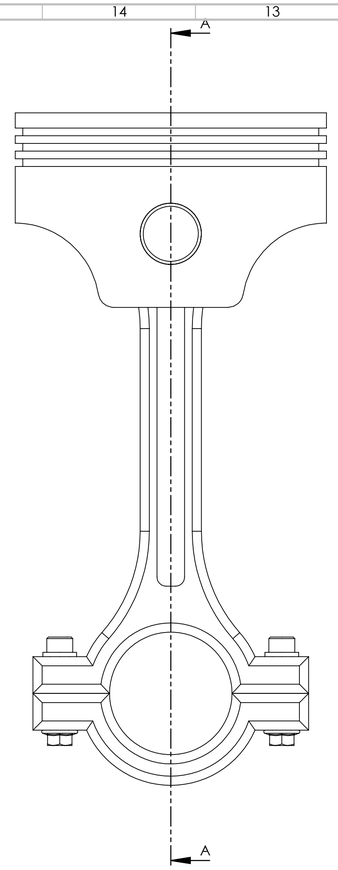

Front View

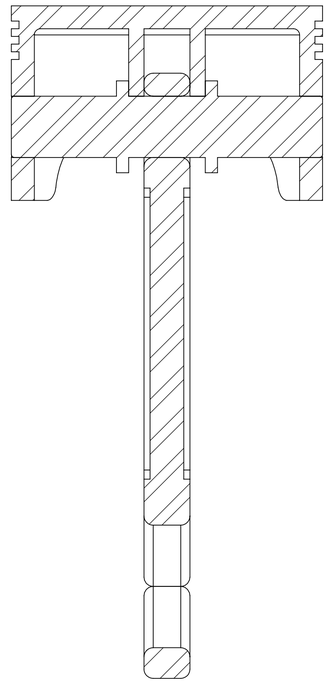

SECTION A-A

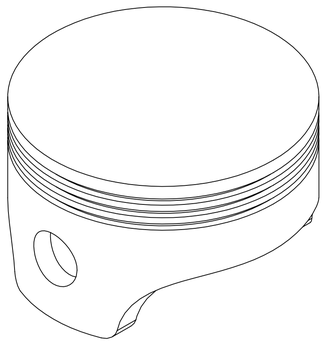

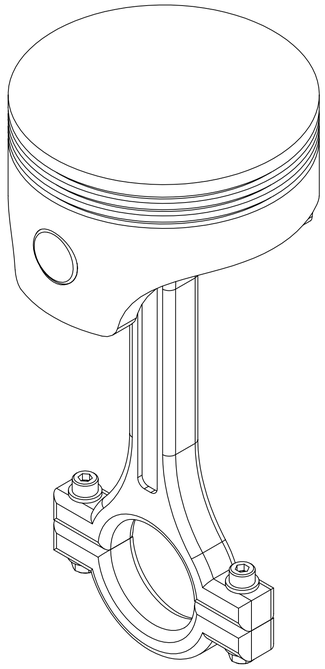

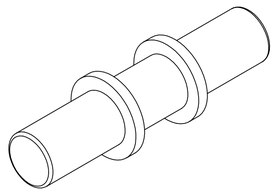

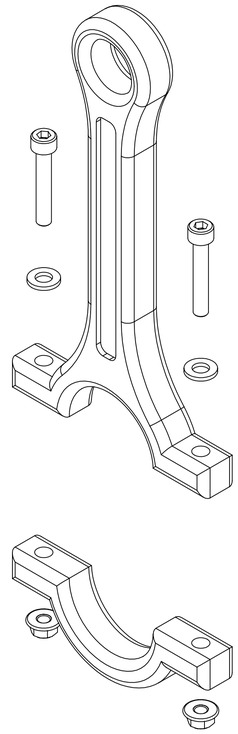

Isometric View

Exploded Isometric View

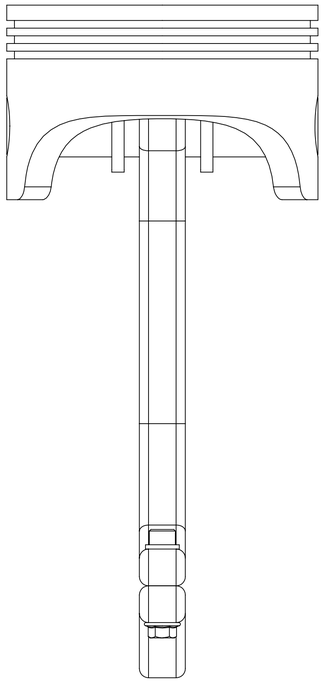

Right View

ITEM NO.	PART NUMBER	DESCRIPTION	QTY.
1	CarbonSteelConrod		1
2	CarbonSteelPiston		1
3	CarbonSteelCoupler		1
4	socket head cap screw_am		2
5	flat washer narrow_am		2
6	hex flange nut_am		2
7	CarbonSteelPin		1

UNLESS OTHERWISE SPECIFIED:
DIMENSIONS ARE IN MILLIMETERS
SURFACE FINISH:
TOLERANCES:
LINEAR:
ANGULAR:

FINISH:

DEBURR AND BREAK SHARP EDGES

DO NOT SCALE DRAWING

REVISION

	NAME	SIGNATURE	DATE
DRAWN			
CHK'D			
APPV'D			
MFG			
Q.A			

TITLE:

MATERIAL:

WEIGHT:

DWG NO. PistonAssembly

A1

SCALE:1:1

SHEET 1 OF 1