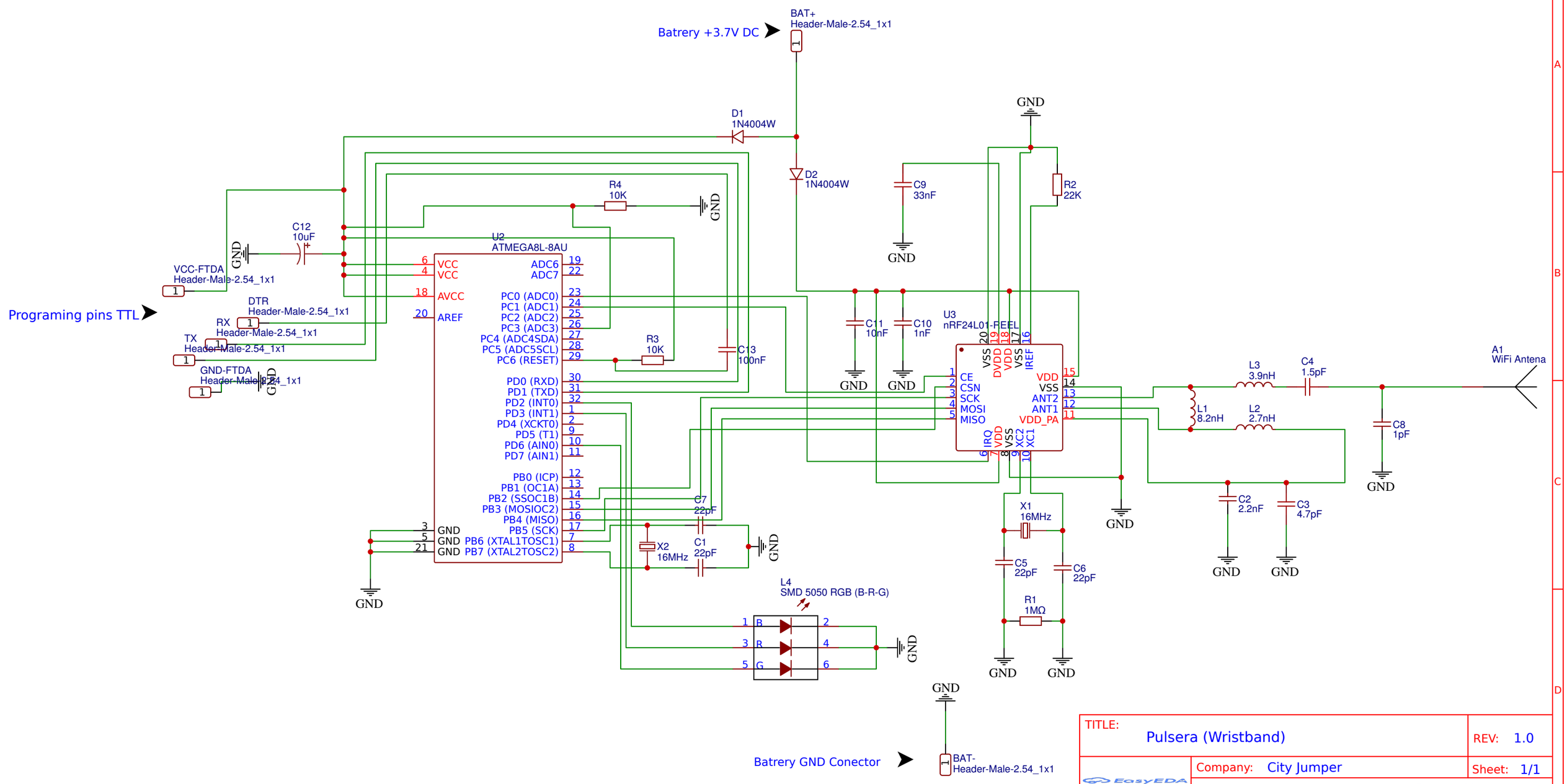
Batrery +3.7V DC
BAT+
Header-Male-2.54_1x1
D1
1N4004W
D2
1N4004W
C9
33nF
R2
22K
R4
10K
C12
10uF
U2
ATMEGA8L-8AU
VCC-FTDA
Header-Male-2.54_1x1
Programing pins TTL
DTR
Header-Male-2.54_1x1
RX
Header-Male-2.54_1x1
TX
Header-Male-2.54_1x1
GND-FTDA
Header-Male-2.54_1x1
VCC
VCC
AVCC
AREF
ADC6
ADC7
PC0 (ADC0)
PC1 (ADC1)
PC2 (ADC2)
PC3 (ADC3)
PC4 (ADC4SDA)
PC5 (ADC5SCL)
PC6 (RESET)
PD0 (RXD)
PD1 (TXD)
PD2 (INT0)
PD3 (INT1)
PD4 (XCKT0)
PD5 (T1)
PD6 (AIN0)
PD7 (AIN1)
PB0 (ICP)
PB1 (OC1A)
PB2 (SSOC1B)
PB3 (MOSIOC2)
PB4 (MISO)
PB5 (SCK)
PB6 (XTAL1TOSC1)
PB7 (XTAL2TOSC2)
GND
R3
10K
C13
100nF
C7
22pF
X2
16MHz
C1
22pF
L4
SMD 5050 RGB (B-R-G)
C11
10nF
C10
1nF
U3
nRF24L01-REEL
CE
CSN
SCK
MOSI
MISO
IRQ
VDD
VSS
DVDD
VDD
VSS
IREF
VDD
VSS
ANT2
ANT1
VDD_PA
XC2
XC1
X1
16MHz
C5
22pF
C6
22pF
R1
1MΩ
L3
3.9nH
C4
1.5pF
L1
8.2nH
L2
2.7nH
C8
1pF
C2
2.2nF
C3
4.7pF
A1
WiFi Antena
Batrery GND Conector
BAT-
Header-Male-2.54_1x1
TITLE:
Pulsera (Wristband)
REV: 1.0
Company: City Jumper
Sheet: 1/1
Date: 2019-05-02
Drawn By: Gabriel Maxemin
EasyEDA