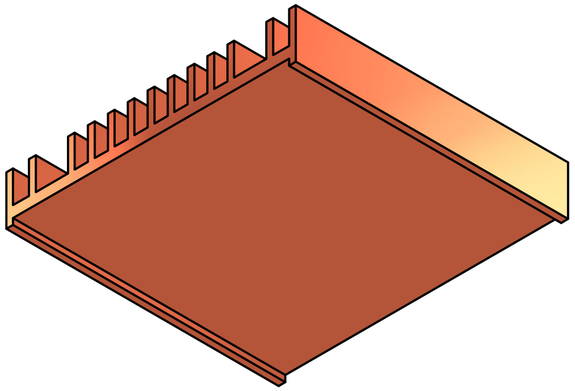

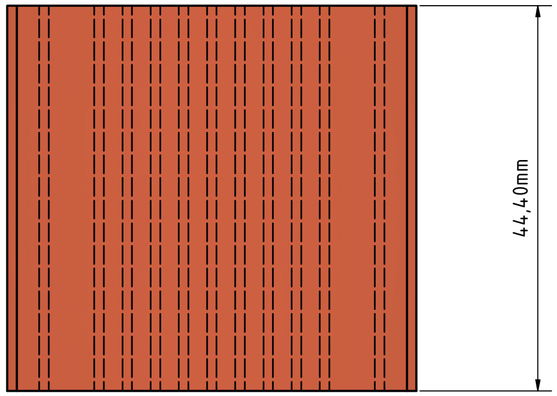

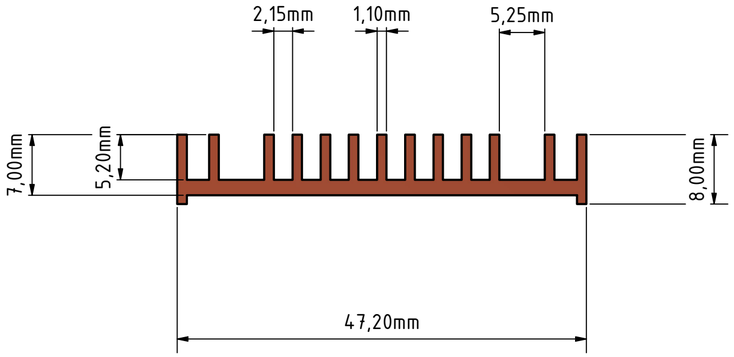

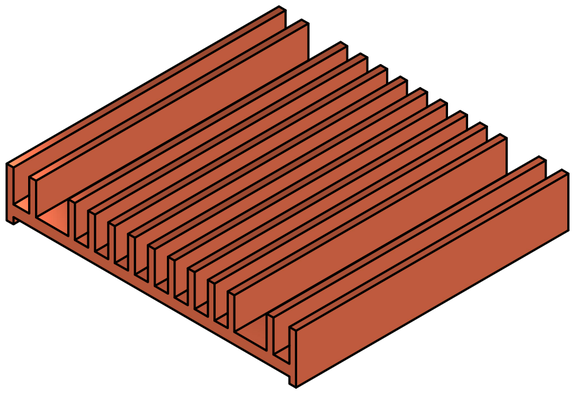

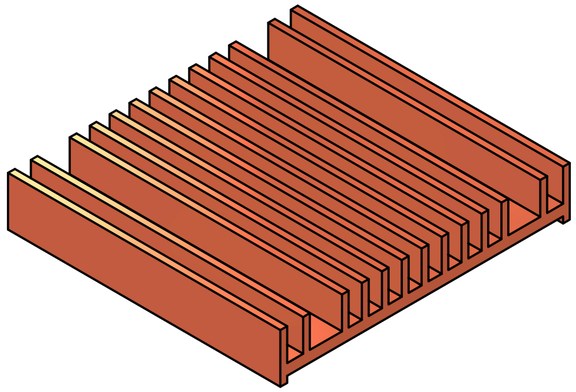

					Date	Name
				Drawn	14/10/2024	ucr
				Checked		
				Standard		
State	Changes	Date	Name			

disipador_00

1

A2