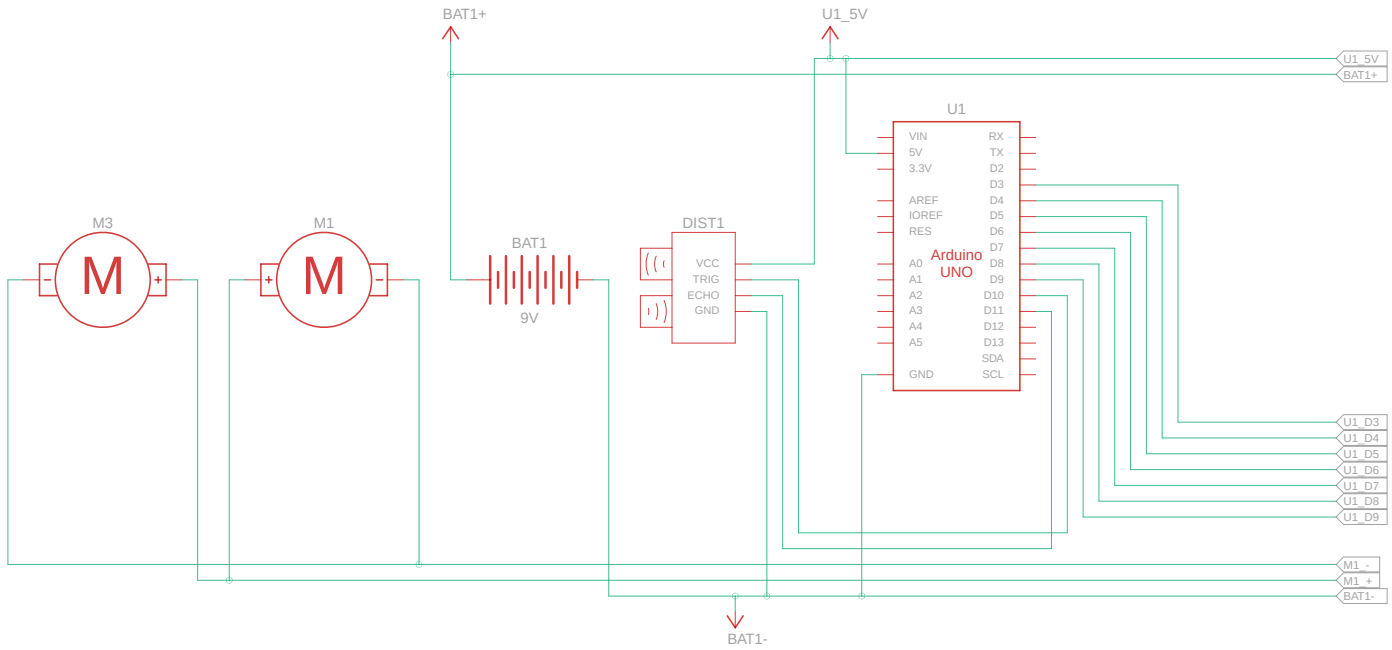

Made with Tinkercad®

Title: Carrinho via bluetooth

Date: 29/09/2026, 12:32:19

Sheet: 1/2

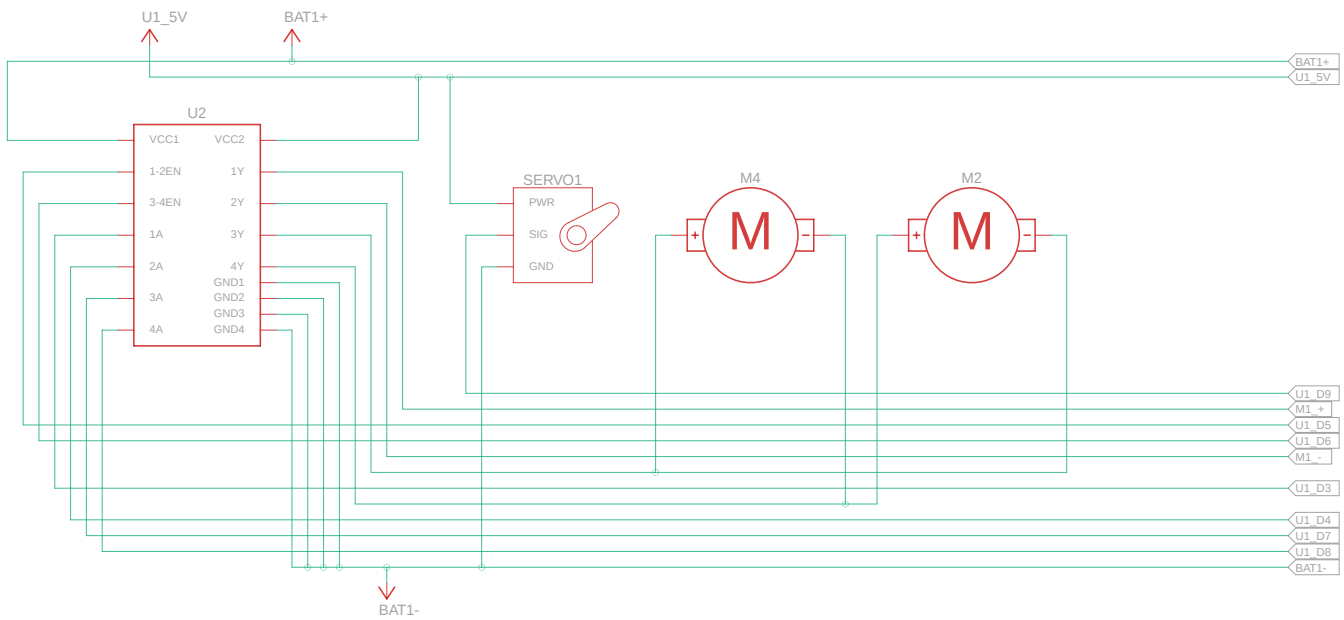

Made with Tinkercad®

Title: Carrinho via bluetooth	
Date: 29/09/2026, 12:32:19	Sheet: 2/2