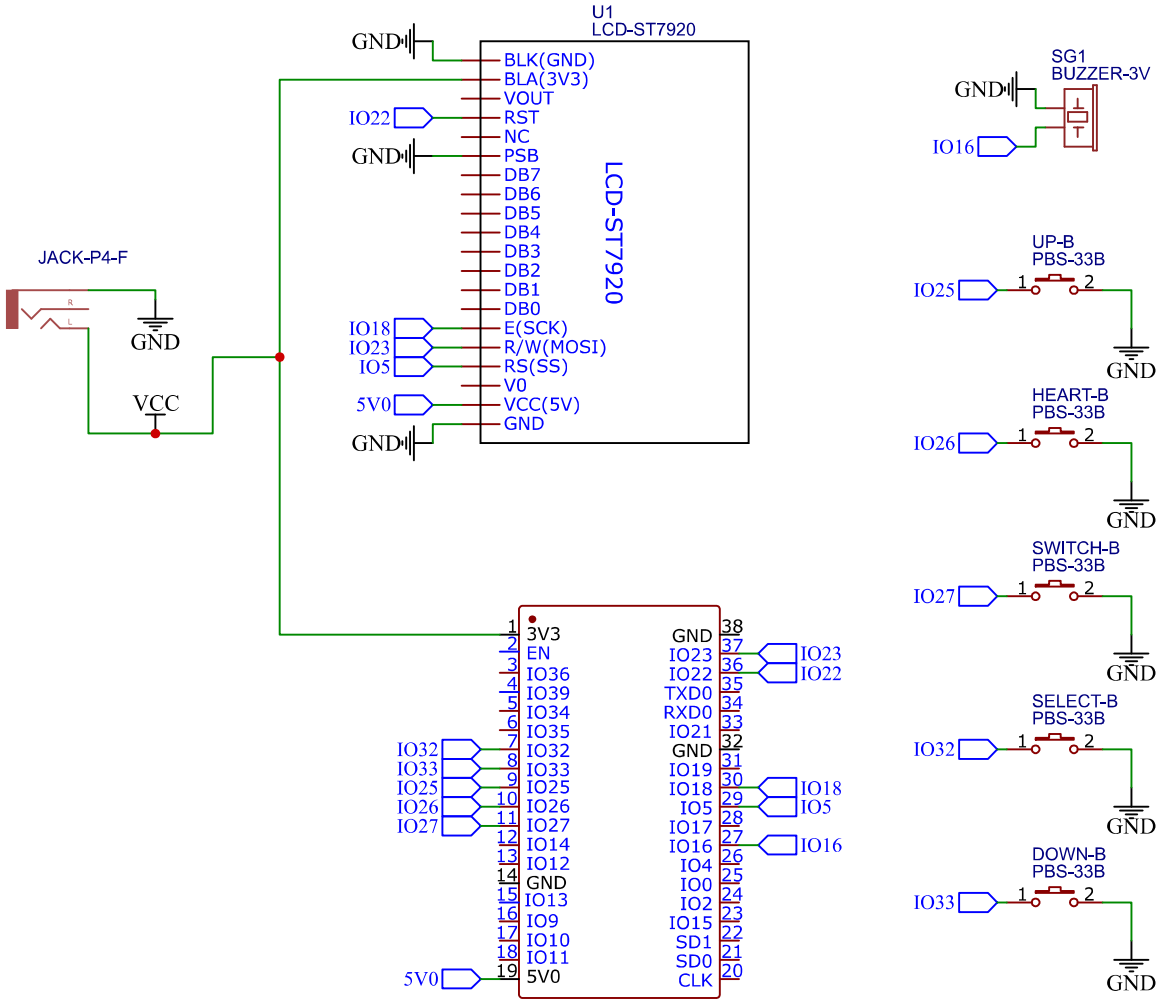

TITLE: Memory Box		REV: 1.0
EasyEDA	Company: GabrielSpdf	Sheet: 1/1
	Date: 2023-09-24 Drawn By: Gabriel Spadafora	