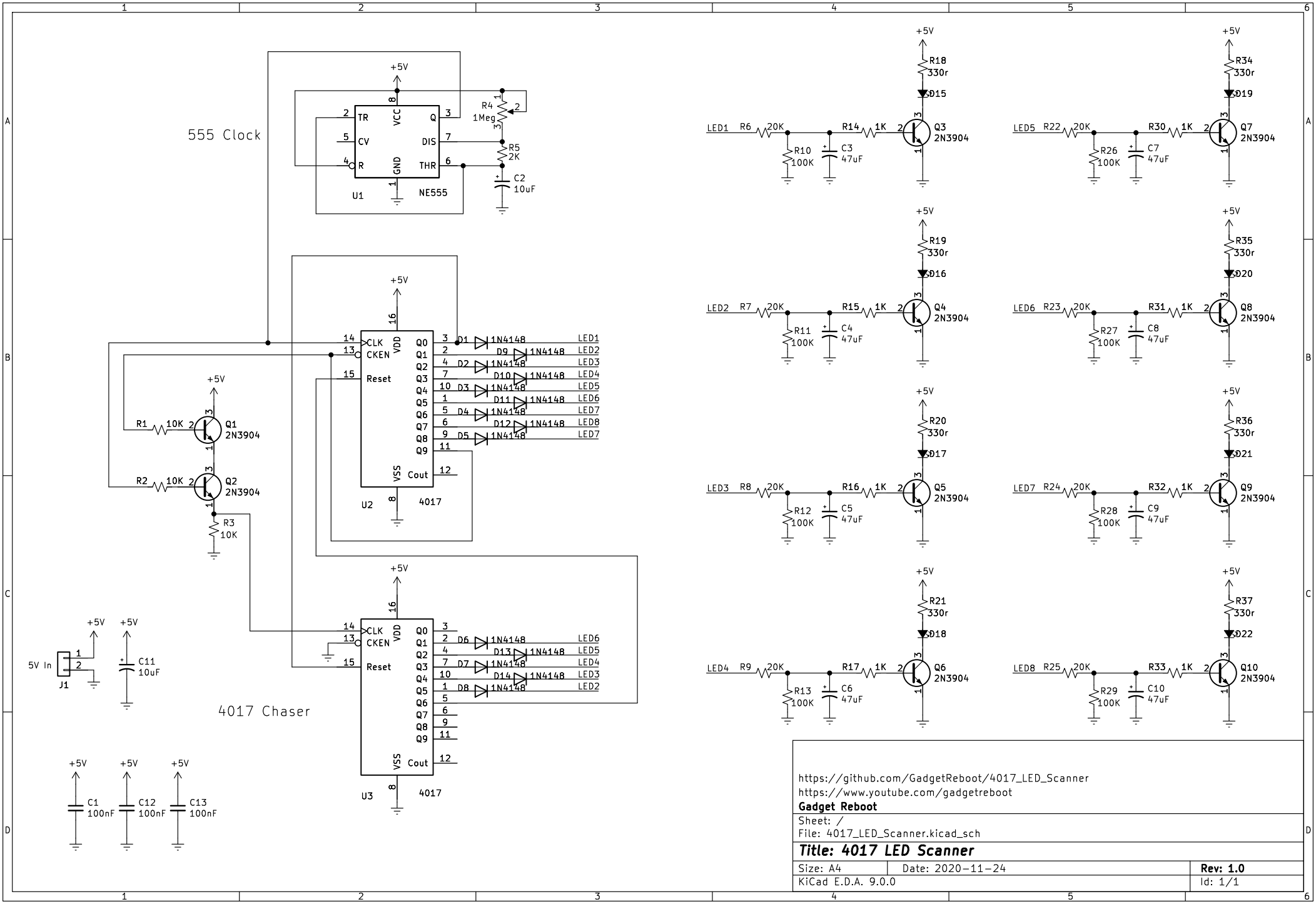

https://github.com/GadgetReboot/4017_LED_Scanner
https://www.youtube.com/gadgetreboot
Gadget Reboot

Sheet: /
File: 4017_LED_Scanner.kicad_sch

Title: 4017 LED Scanner

Size: A4	Date: 2020-11-24	**Rev: 1.0**
KiCad E.D.A. 9.0.0		Id: 1/1