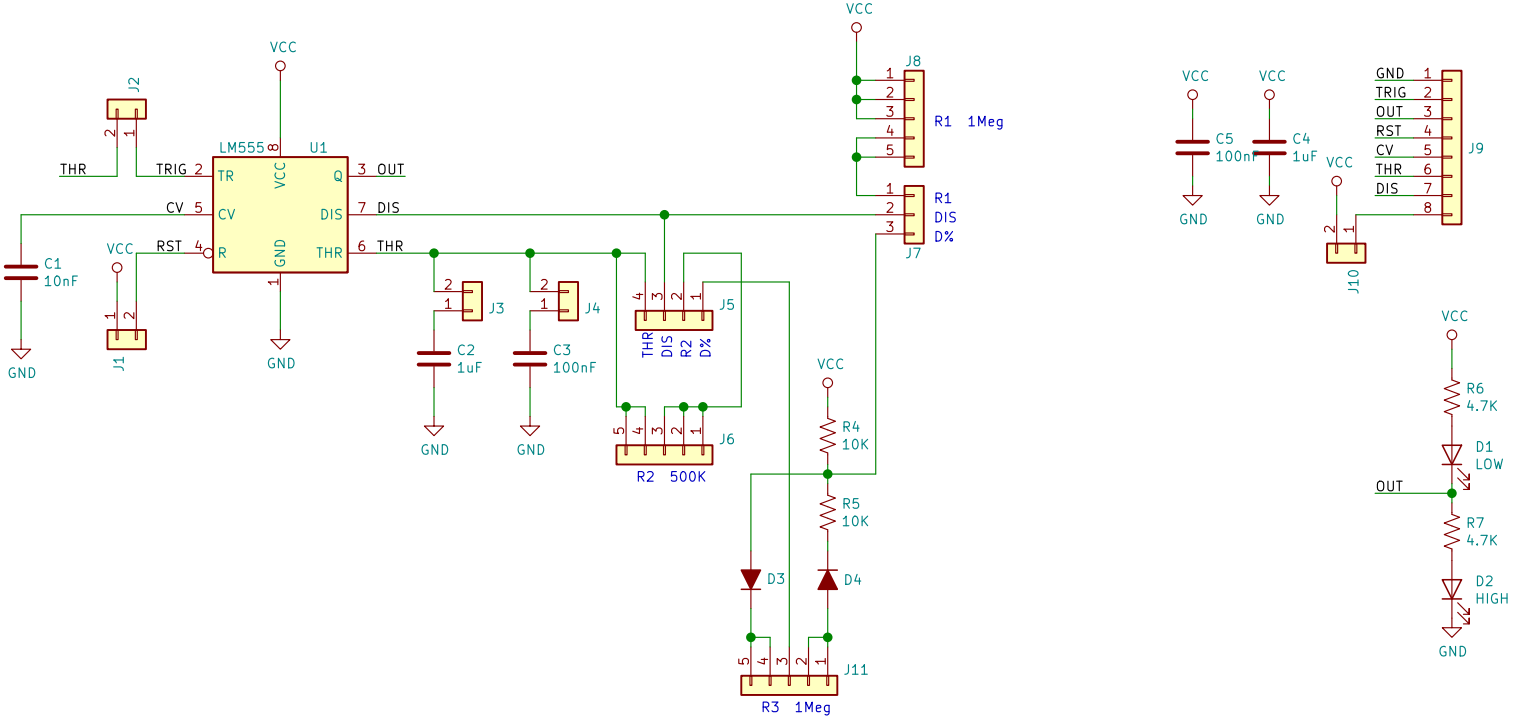

https://github.com/GadgetReboot/555_Devboard
https://www.youtube.com/gadgetreboot
Gadget Reboot

Sheet: /
File: GR_555_DEV1.0.sch

Title: 555 Timer Dev Board

Size: A4	Date: 2019-07-03	**Rev: 1.0**
KiCad E.D.A. kicad (5.1.2-1)-1		Id: 1/1