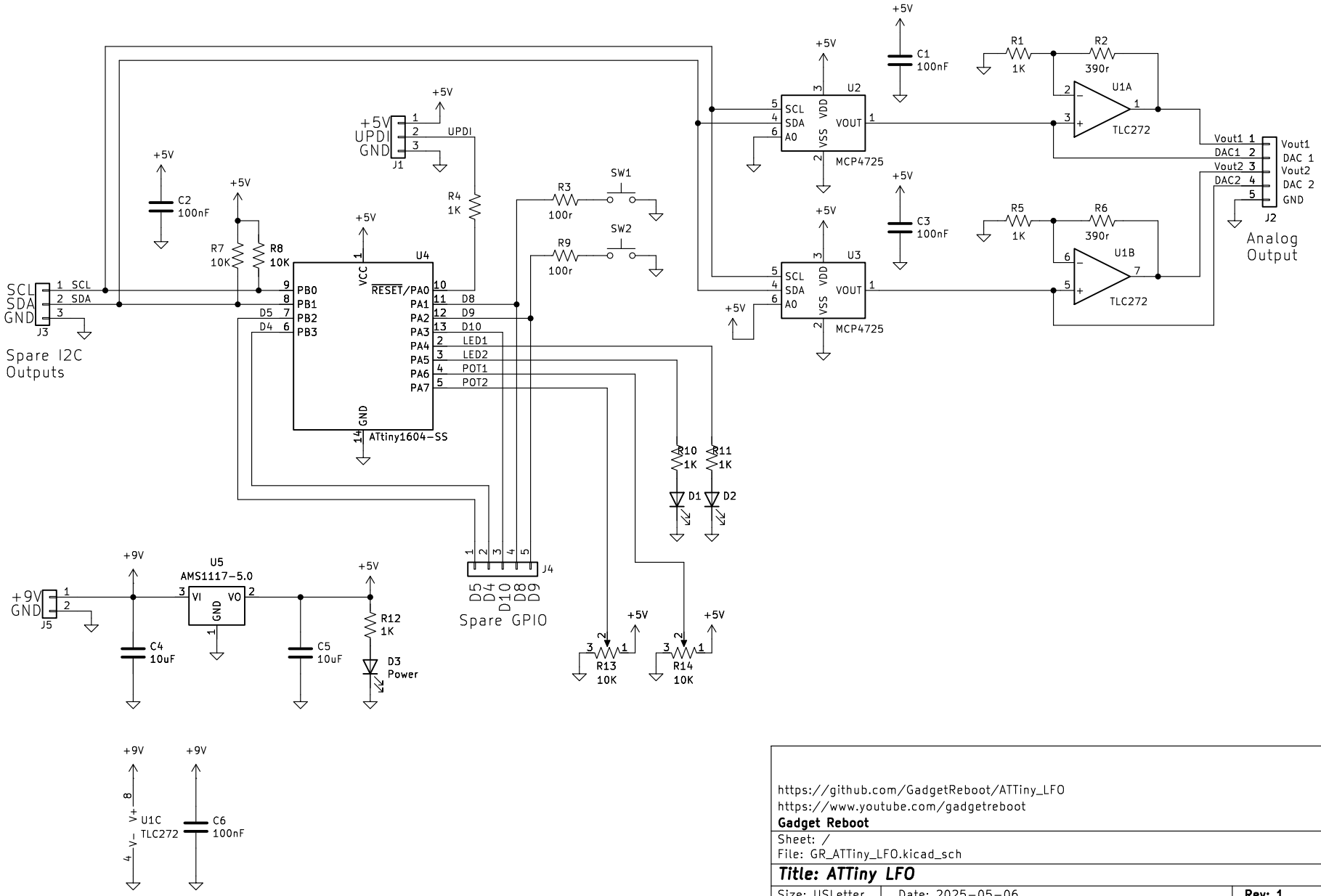

https://github.com/GadgetReboot/ATTiny_LFO
https://www.youtube.com/gadgetreboot
Gadget Reboot

Sheet: /
File: GR_ATTiny_LFO.kicad_sch

Title: ATTiny LFO

Size: USLetter	Date: 2025-05-06	**Rev: 1**
KiCad E.D.A. 9.0.0		Id: 1/1