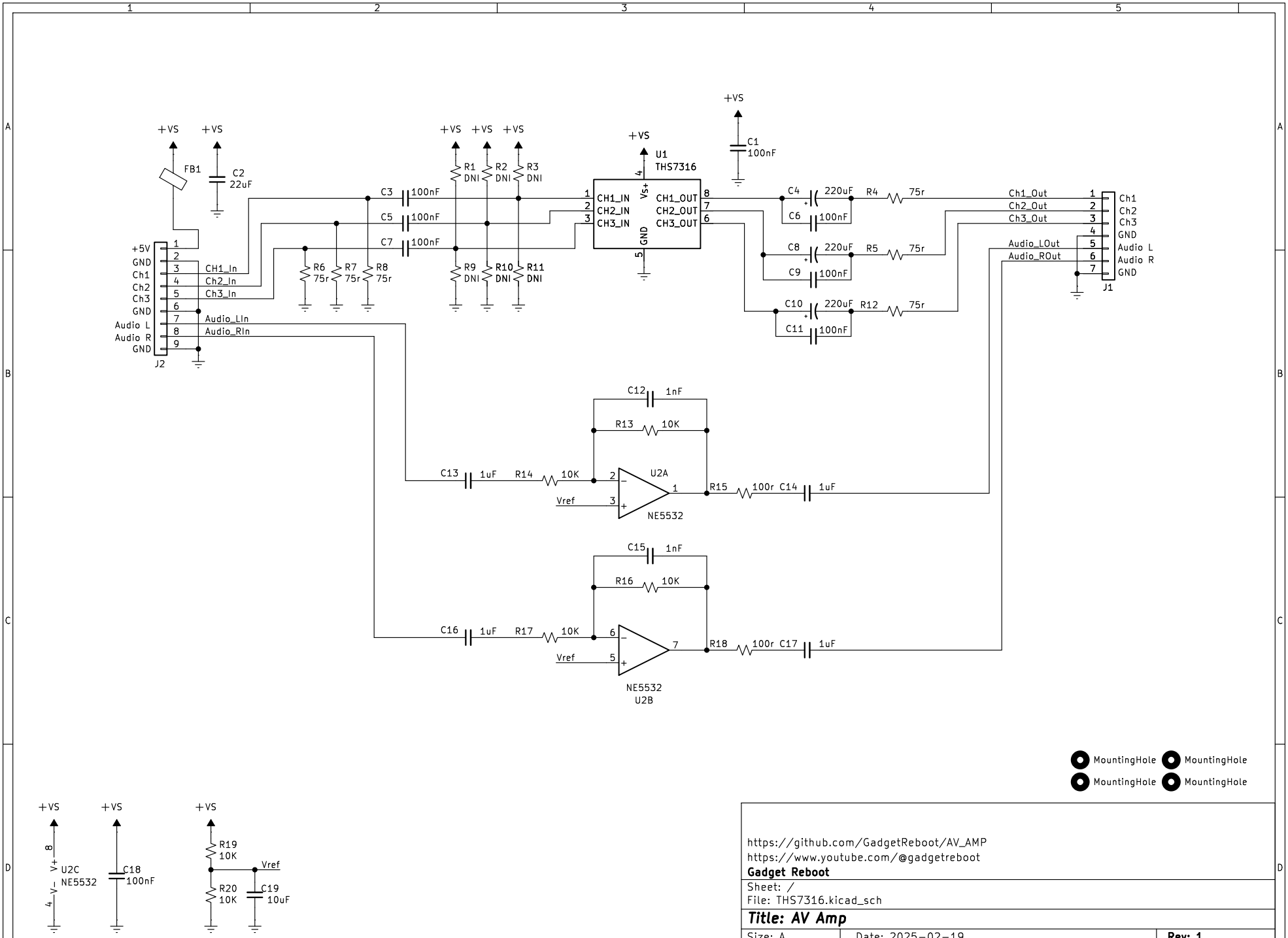

https://github.com/GadgetReboot/AV_AMP
https://www.youtube.com/@gadgetreboot
Gadget Reboot

Sheet: /
File: THS7316.kicad_sch

Title: AV Amp

Size: A	Date: 2025-02-19	**Rev: 1**
KiCad E.D.A. 8.0.7		Id: 1/1