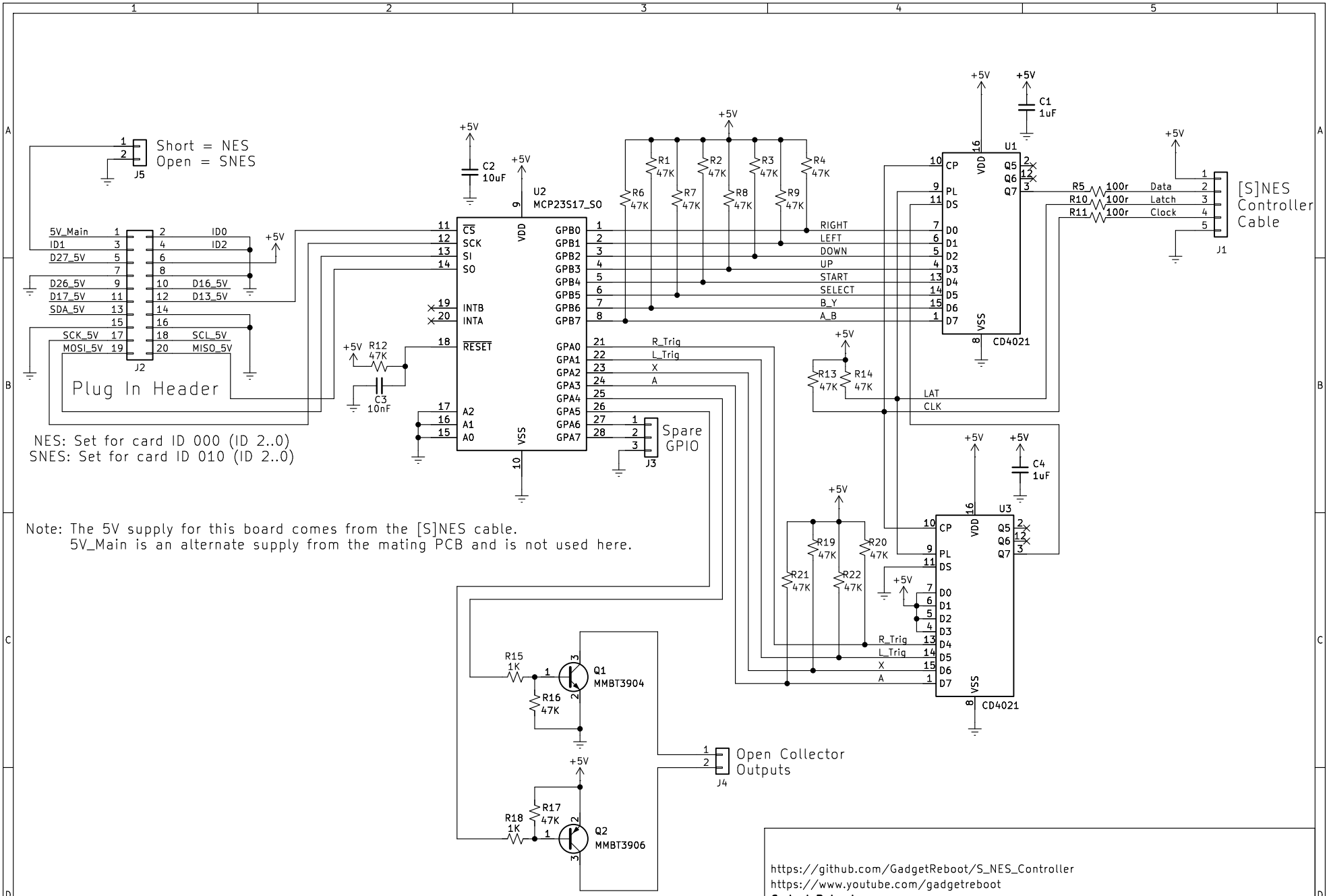

https://github.com/GadgetReboot/S_NES_Controller
https://www.youtube.com/gadgetreboot
Gadget Reboot

Sheet: /
File: S_NES_Controller.kicad_sch

Title: NES/SNES Control Interface

Size: A	Date: 2025-07-21	**Rev: 1**
KiCad E.D.A. 9.0.3		Id: 1/1