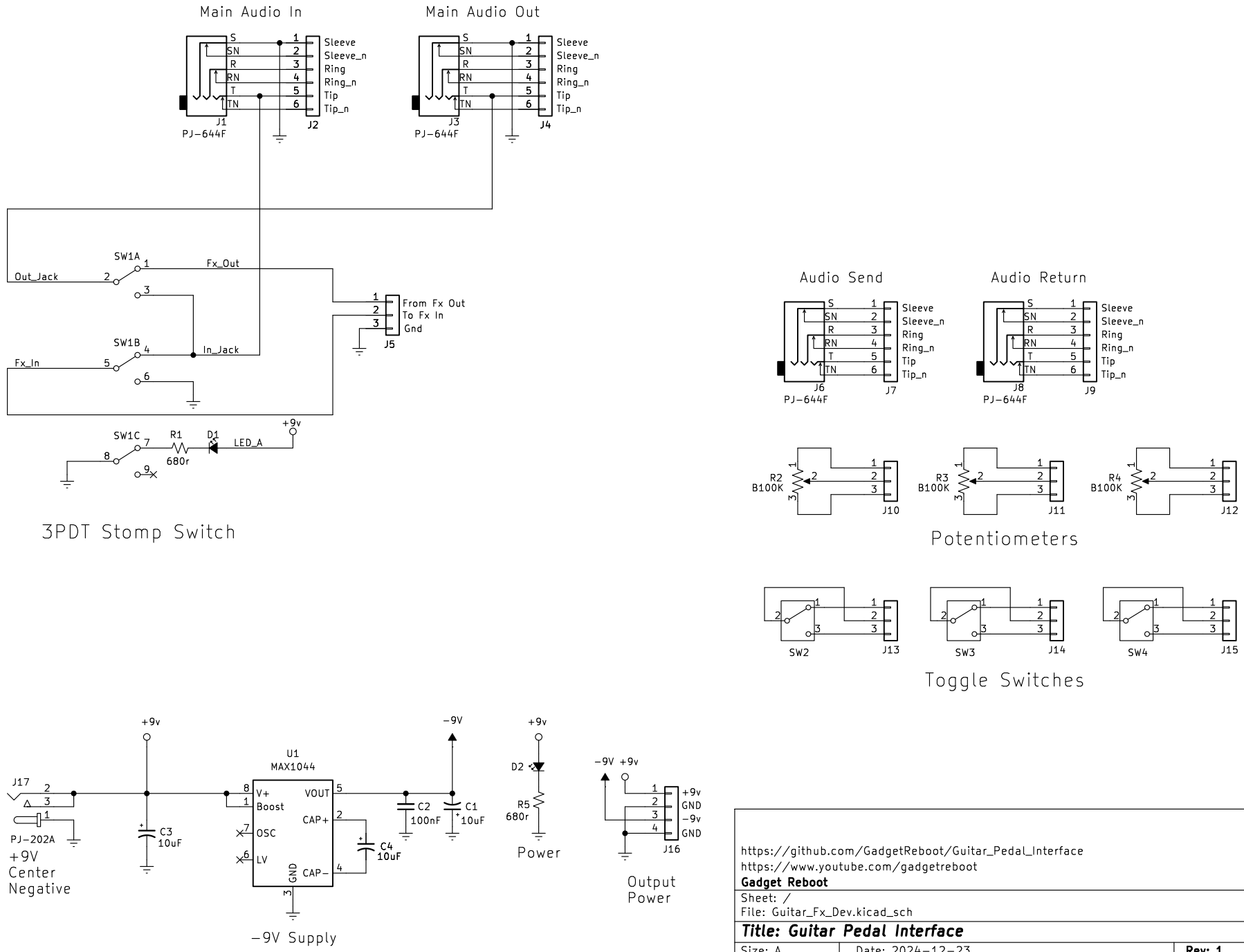

https://github.com/GadgetReboot/Guitar_Pedal_Interface
https://www.youtube.com/gadgetreboot
Gadget Reboot

Sheet: /
File: Guitar_Fx_Dev.kicad_sch

Title: Guitar Pedal Interface

Size: A	Date: 2024-12-23	**Rev: 1**
KiCad E.D.A. 8.0.5		Id: 1/1