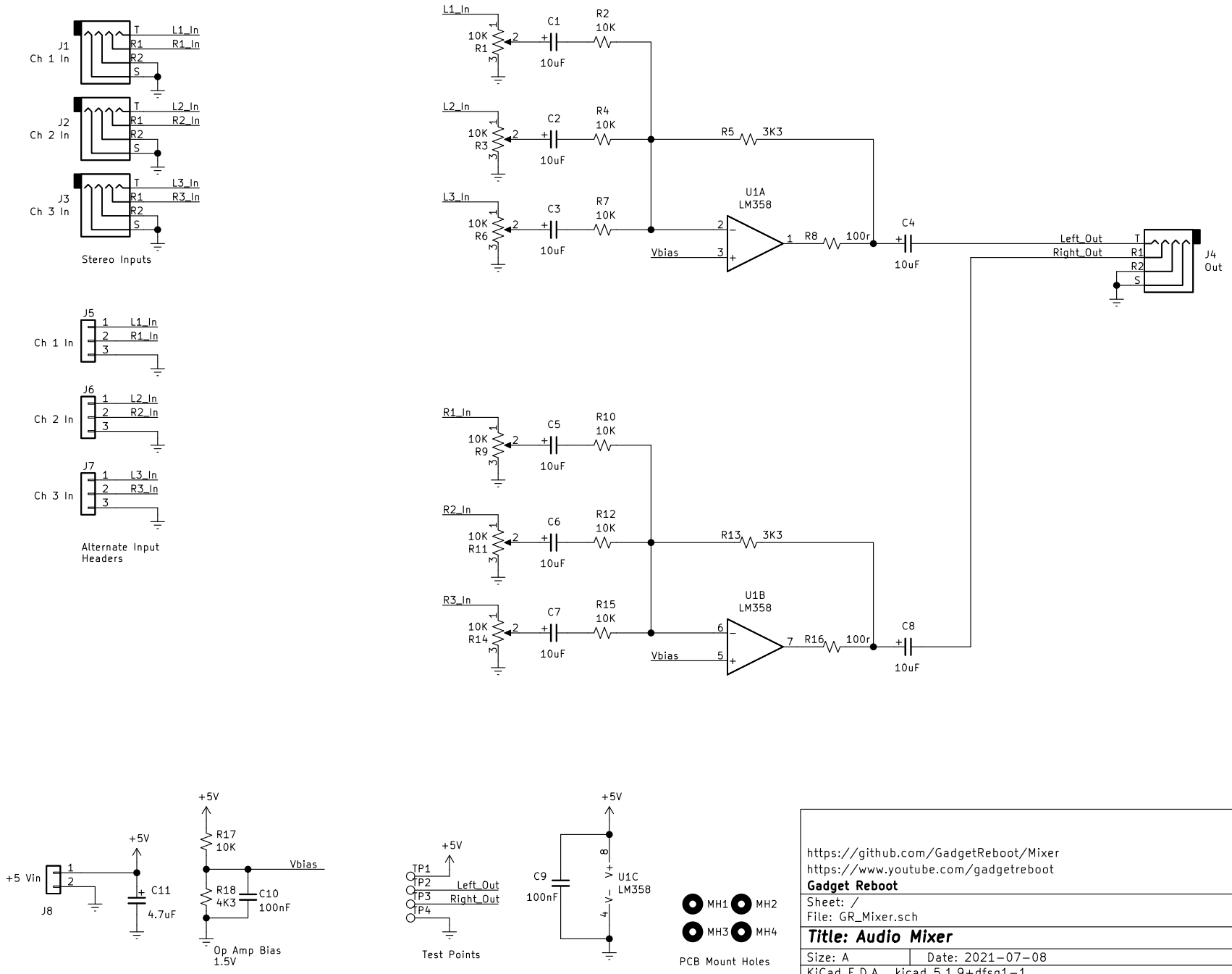

https://github.com/GadgetReboot/Mixer
https://www.youtube.com/gadgetreboot
Gadget Reboot

Sheet: /
File: GR_Mixer.sch

Title: Audio Mixer

Size: A	Date: 2021-07-08	**Rev: 1**
KiCad E.D.A. kicad 5.1.9+dfsg1-1		Id: 1/1